DIVISION OF TRAFFIC ENGINEERING

STANDARDS AND GUIDELINES FOR COMMERCIAL AND RESIDENTIAL DEVELOPMENTS

STOP SIGN MUST BE
30" REFLECTIVE,
HIGH INTENSITY

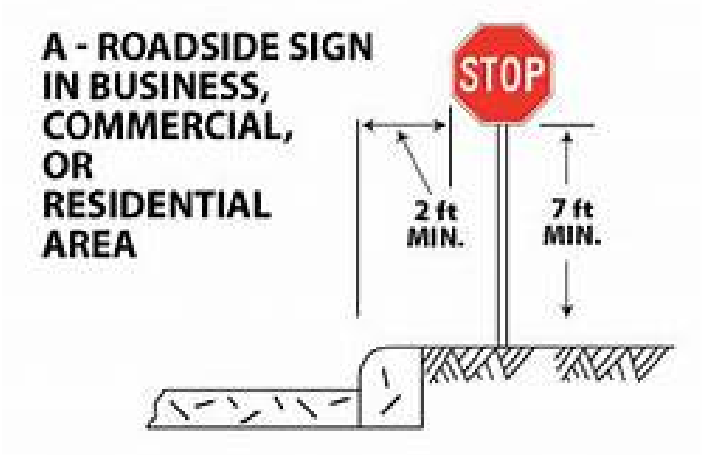

STOP SIGN POLES MUST BE INSTALLED
32 - 34" INTO THE GROUND USING TYPE I
SQUARE TUBING POST WITH SOIL STABILIZER
(CALL 811 PRIOR TO INSTALL)

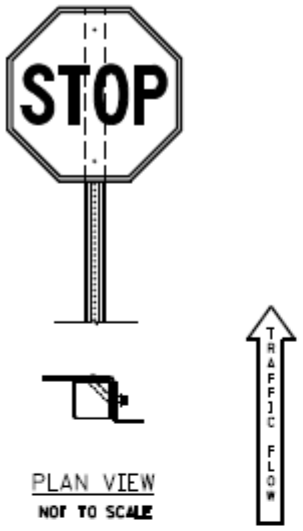

PLAN VIEW
NOT TO SCALE

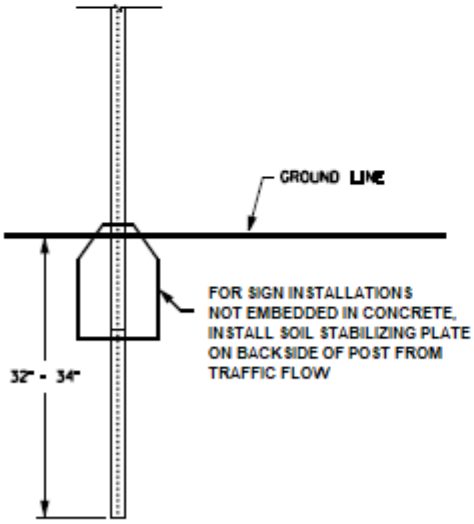

TYPE I
SQUARE TUBING POST
WITH SOIL STABILIZER

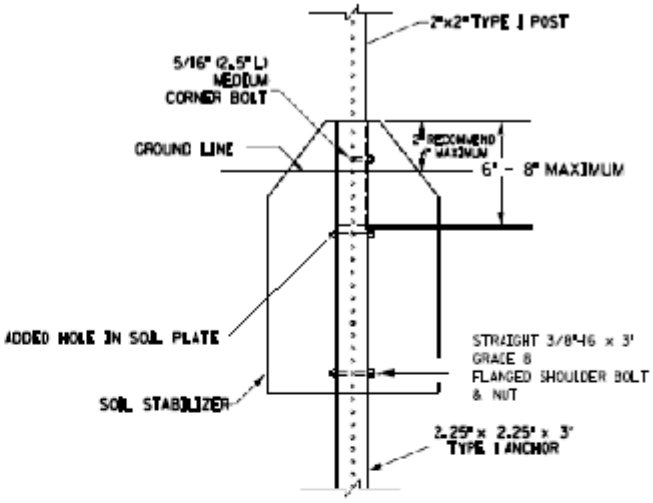

SOIL STABILIZER DETAIL
FOR TYPE I POST

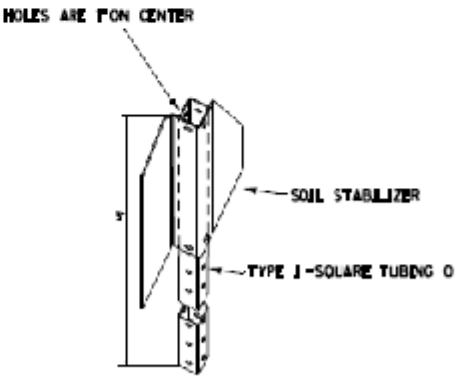

SOIL STABILIZER DETAIL

Typical Stop Sign at intersection Placement (with enhanced street name signs)

Street Name Signs

- All new street name signs shall be 9” enhanced (ESNS) and reflective, high intensity.
- LFUCG Traffic Engineering uses green signs with white lettering.
- Street name signs shall not be all upper case.
- Street name signs shall use ‘Highway B, C or D’ font as shown below.

Common abbreviations:

Alley – Aly	Avenue – Ave	Boulevard – Blvd	Circle – Cir
Court – Ct	Cove – Cv	Drive – Dr	Lane – Ln
Loop – Loop	Park – Park	Parkway – Pkwy	Point – Pt
Road – Rd	Street – St	Trail – Trl	

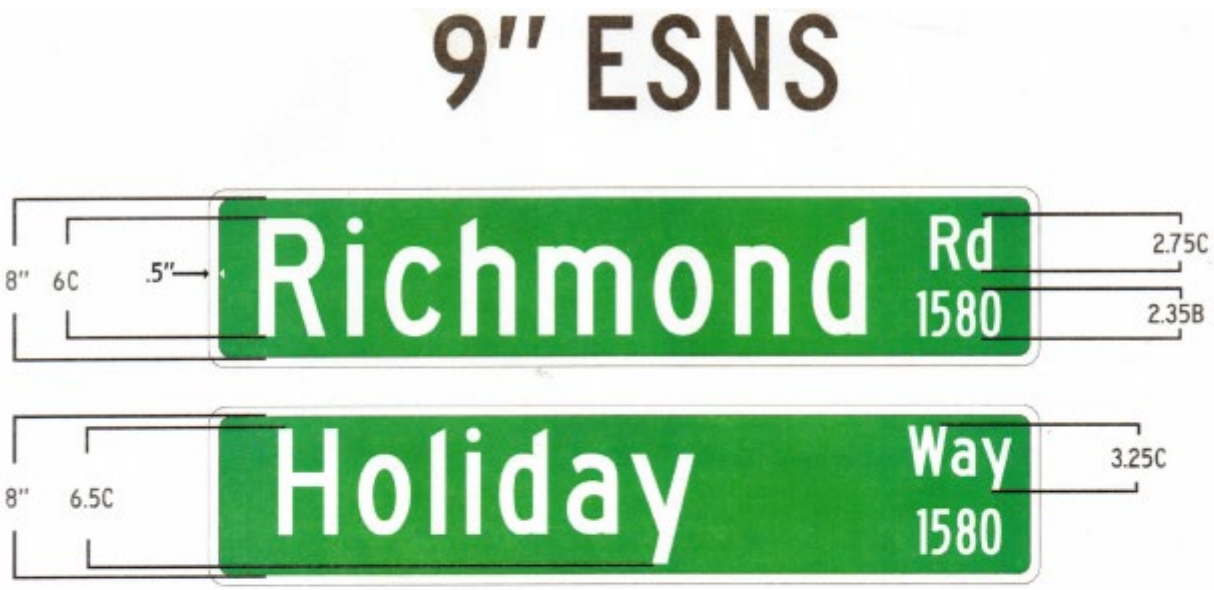

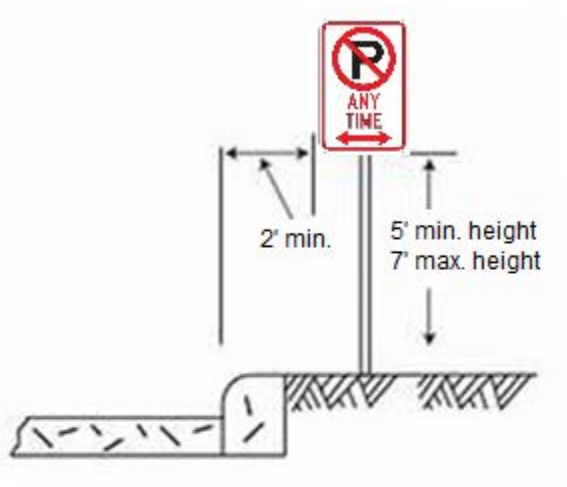

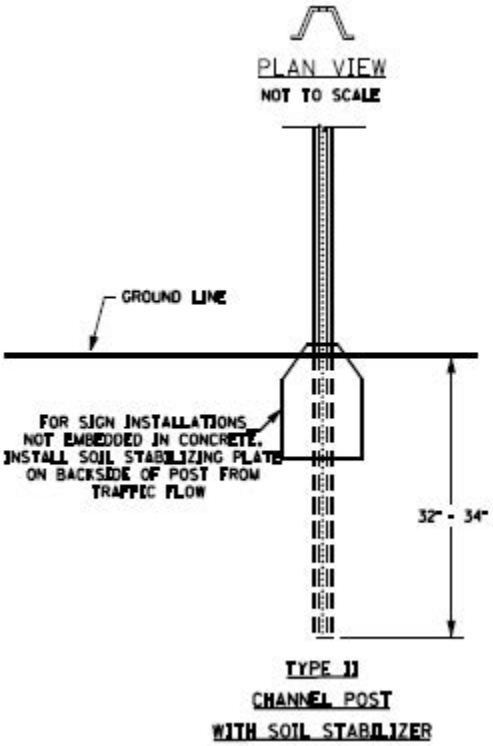

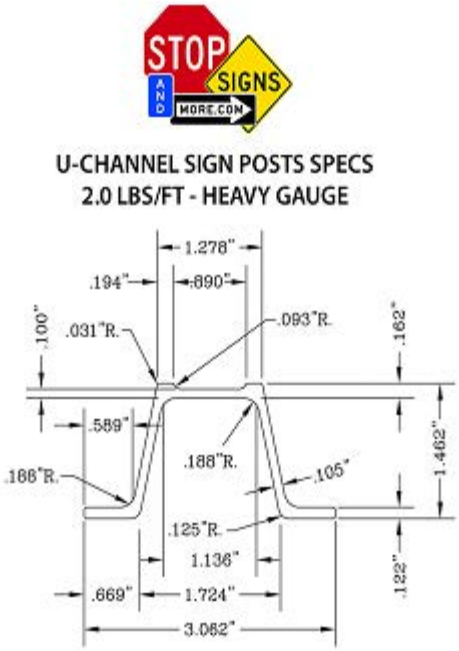

U-Channel Posts (Type II)

12"x18" Reflective, High Intensity
No Parking Any Time
sign with double arrow
(CALL 811 PRIOR TO INSTALL)

Typical No Parking sign

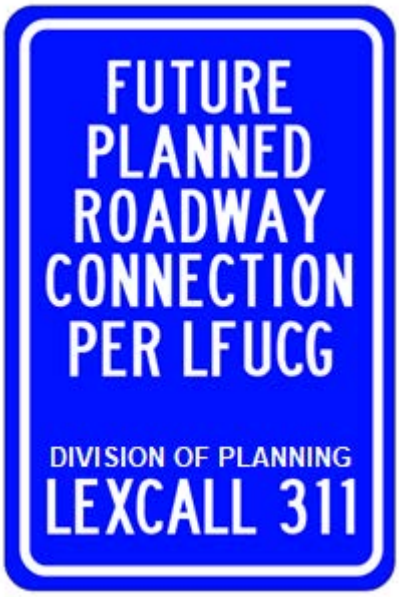

12”x18” Stub Street sign
Reflective, High Intensity
to be mounted on same post as
OM4-3 Type 4 Object Marker (Red Diamond)

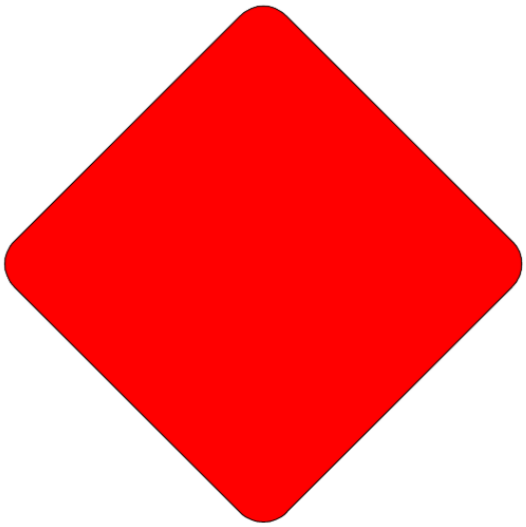

OM4-3
Type 4 Object Marker
(all red)

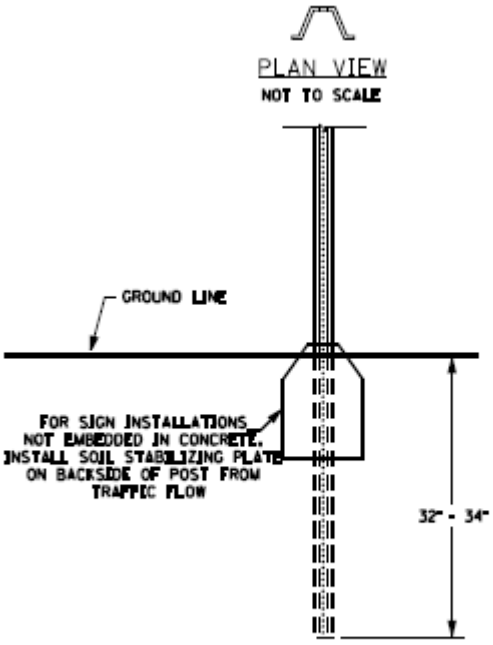

TYPE II
CHANNEL POST
WITH SOIL STABILIZER

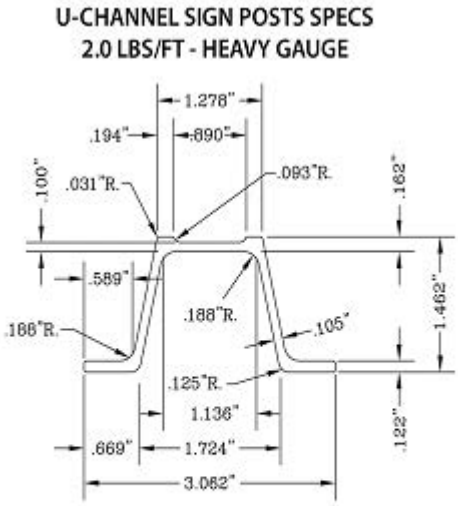

U-Channel Posts (Type II)

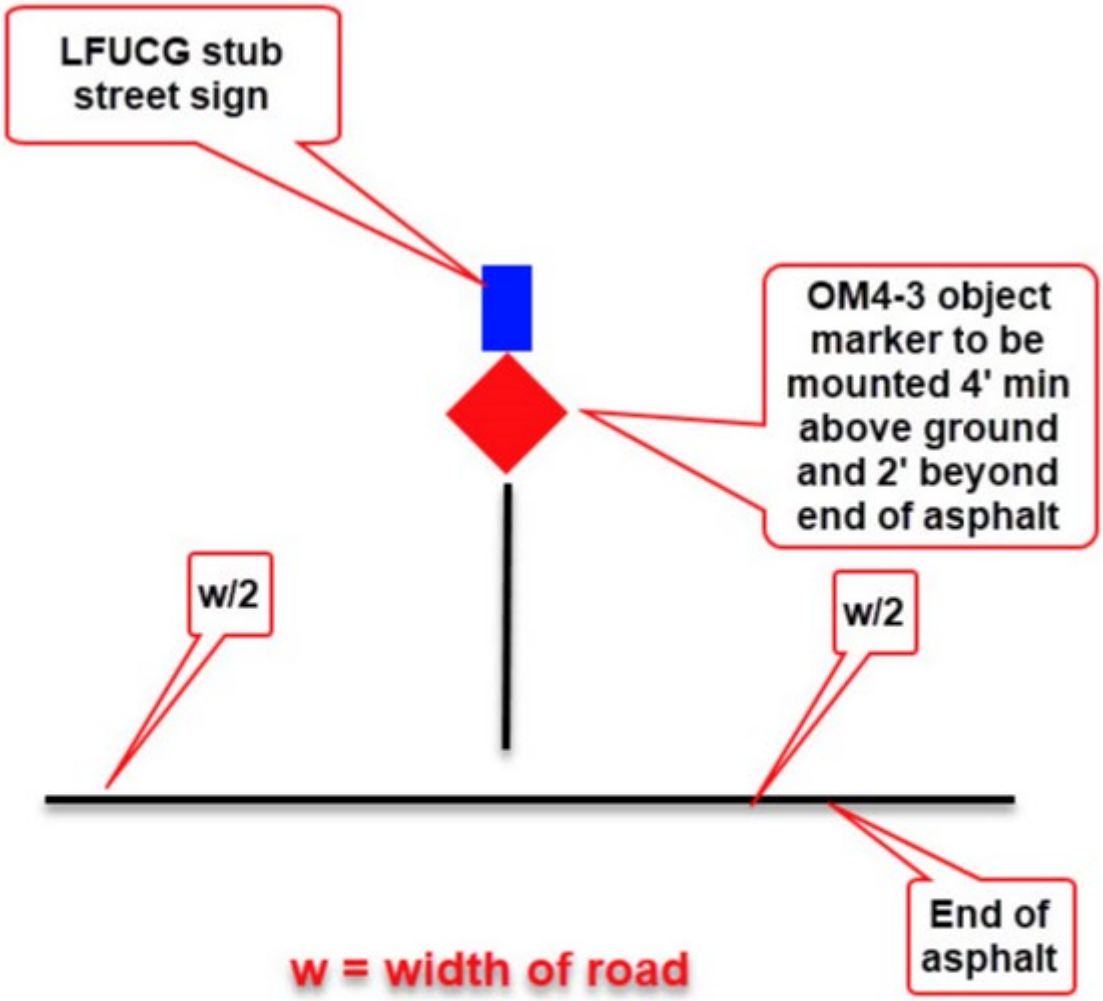

Typical OM4-3 red object marker and LFUCG stub street sign placement

Pavement Markings on Public Streets

- A 4” double yellow spray thermoplastic centerline will be required on all roads that are 36 feet or wider unless the plans dictate otherwise.
- All stop bars shall be 2 feet thick and be made of thermoplastic materials.
- Enhanced Crosswalks (ECW) will be required for all new crosswalks. ECWs shall be 1 foot thick by 6 feet wide (min.). Spacing between strips is 2 feet. All crosswalks shall be made of thermoplastic materials. Stop bars shall be used and be placed no closer than 4 feet from any part of the marked crosswalk.

Pavement Markings on Private Roads or Parking Lots

- All ADA handicap parking stalls and markings shall be light blue thermoplastic. All other parking stall lines shall be painted white.
- Stop bars and **STOP** legends shall be installed at the ends of parking aisles. Stop bars and **STOP** legends shall be white thermoplastic. **STOP** lettering shall be a minimum of 36” in height.

- Enhanced Crosswalks (ECW) will be required for all new crosswalks. ECWs shall be 1 foot thick by 6 feet wide (min.). Spacing between strips is 2 feet. All crosswalks shall be made of thermoplastic materials. Stop bars shall be used and be placed no closer than 4 feet from any part of the marked crosswalk.
- Directional arrows and other miscellaneous pavement markings such as cross-hatching, median markings, etc. shall be thermoplastic.
- Yellow markings shall be used only for centerline markings to separate traffic traveling in the opposite direction or for yellow curbing to prohibit parking where applied.

PARKING LOT LAYOUT

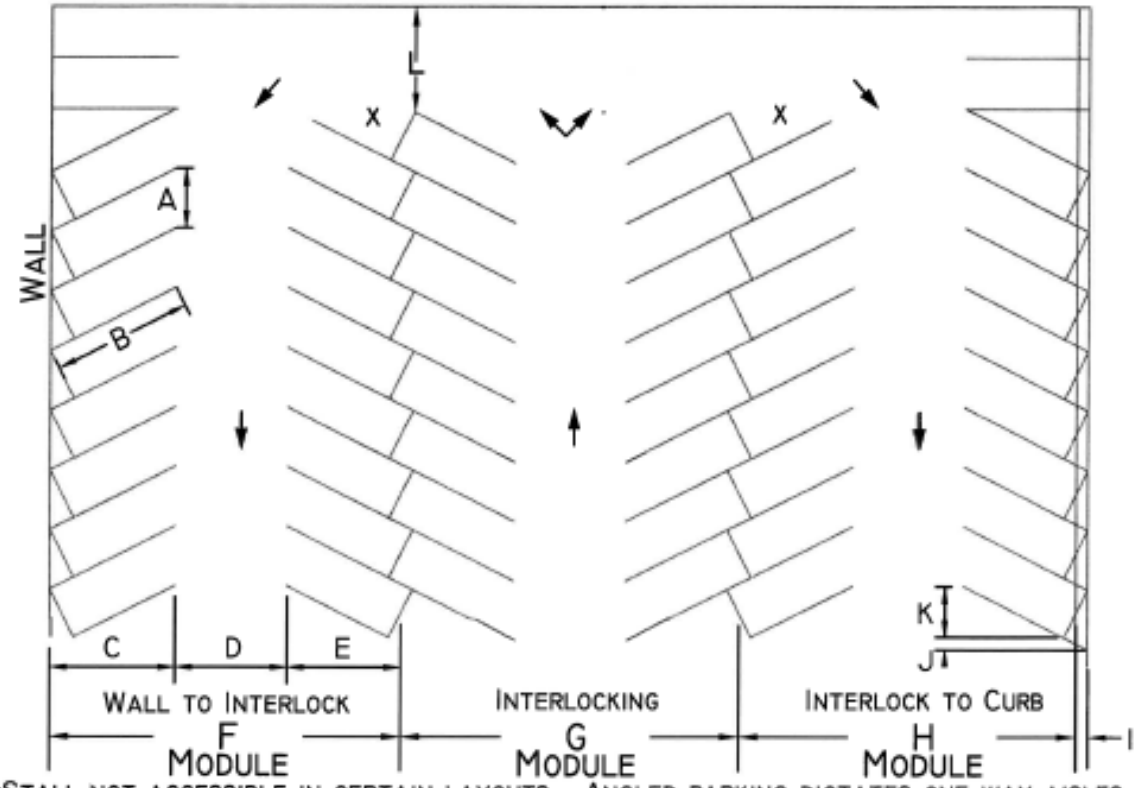

X=STALL NOT ACCESSIBLE IN CERTAIN LAYOUTS ANGLED PARKING DICTATES ONE-WAY AISLES

ANGLE	STALL WIDTH	A	B	C	D	E	F	G	H	I	J	K	L
45°	**7.5	10.6	21.2	14.2	13.5	12.3	40.0	38.5	38.5	1.5	5.3	10.7	14.0
	8.5	12.0	24.8	16.5	15.0	14.5	46.0	44.0	43.5	2.5	6.3	11.0	"
	9.0	12.7	"	"	14.0	"	"	"	"	"	"	"	"
60°	**7.5	8.7	17.3	15.4	15.0	14.0	44.4	43.0	42.9	1.5	1.7	8.0	"
	8.5	9.8	20.2	18.0	18.0	16.5	52.5	51.0	50.0	2.5	2.7	8.3	"
	9.0	10.4	"	"	16.0	"	"	"	"	"	"	"	"
75°	**7.5	7.8	15.5	16.0	17.0	15.1	48.1	47.0	46.6	1.5	0.4	4.7	"
	8.5	8.8	18.1	18.5	22.0	17.5	58.0	57.0	55.5	2.5	0.5	5.0	"
	9.0	9.3	"	"	21.0	"	"	"	"	"	"	"	"
90°	**7.5	7.5	15.5	15.5	22.0	15.5	53.0	52.0	51.5	1.5	5.0	0.0	D
	8.5	8.5	18.0	18.0	26.0	18.0	62.0	62.0	59.5	2.5	"	"	D
	9.0	9.0	18.0	"	24.0	"	60.0	60.0	"	"	"	"	D

** 7.5' WIDE STALLS ARE FOR COMPACT CARS ONLY AND MUST BE SIGNED AS SUCH.

PASSENGER VEHICLES

PARKING LAYOUT NEAR SIDEWALKS

TYPICAL LAYOUT

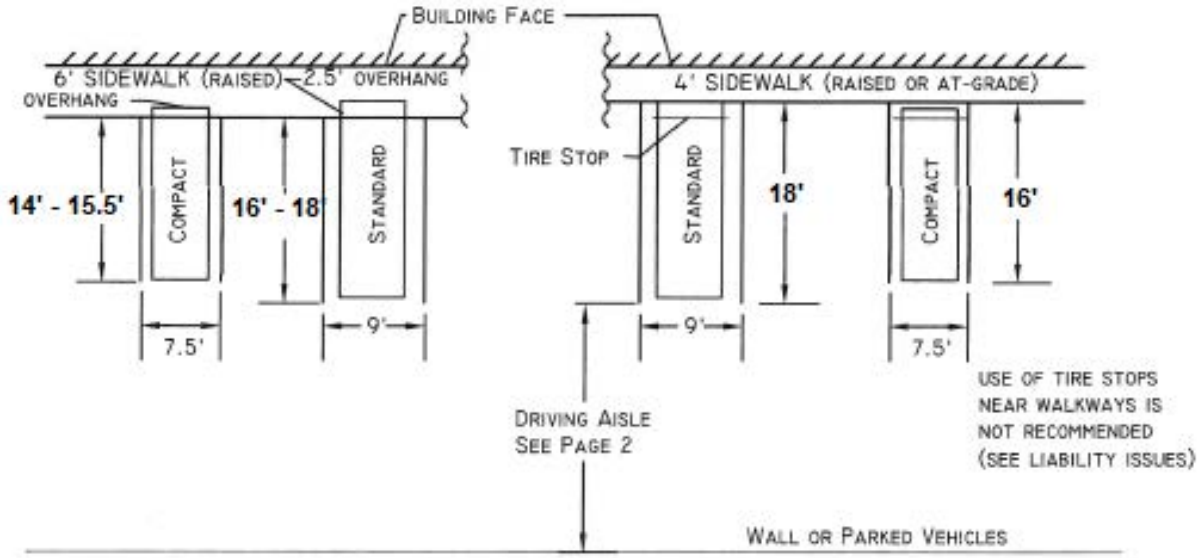

NOTE: COMPACT STALLS MUST BE SIGNED AND MAY CONSTITUTE UP TO 25% OR REQUIRED PARKING.

RECOMMENDED STALL WIDTHS

WIDTH	TYPICAL TURNOVER	TYPICAL USES
9.5 FEET	HIGH W/LOADING	GROCERY AND HIGH VOLUME RETAIL STORES
9.0 FEET	HIGH TO MEDIUM	RETAIL CUSTOMERS, BANKS, FAST FOODS, OTHER HIGH TURNOVER RATES
8.5 FEET	MEDIUM TO LOW	VISITORS, EMPLOYEES, RESIDENTIAL, AIRPORT, HOSPITALS, COMMUTER

PERIMETER REQUIREMENTS

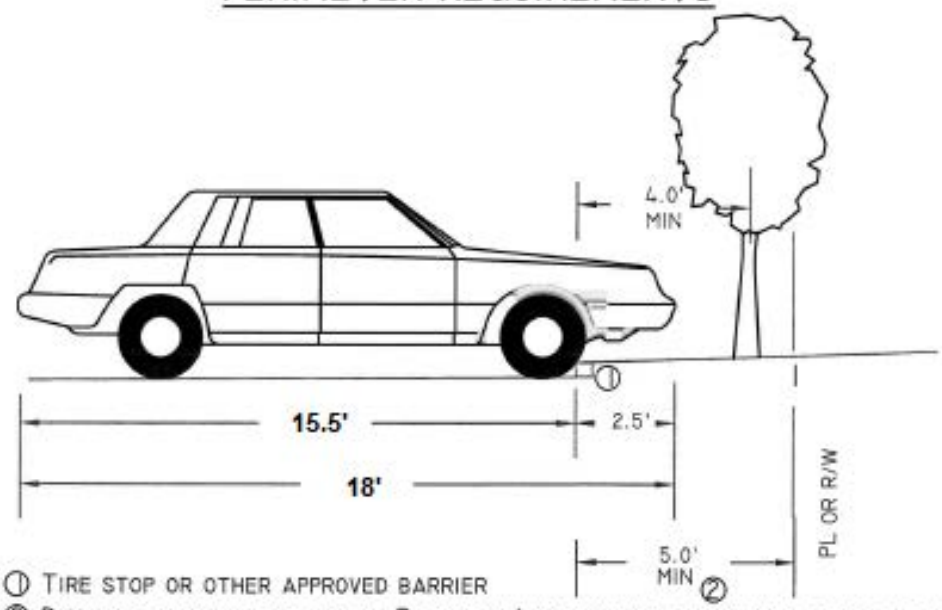

① TIRE STOP OR OTHER APPROVED BARRIER
② DISTANCE MAY BE REDUCED AT PROPERTY LINES WHEN LANDSCAPING IS NOT REQUIRED

PASSENGER VEHICLES

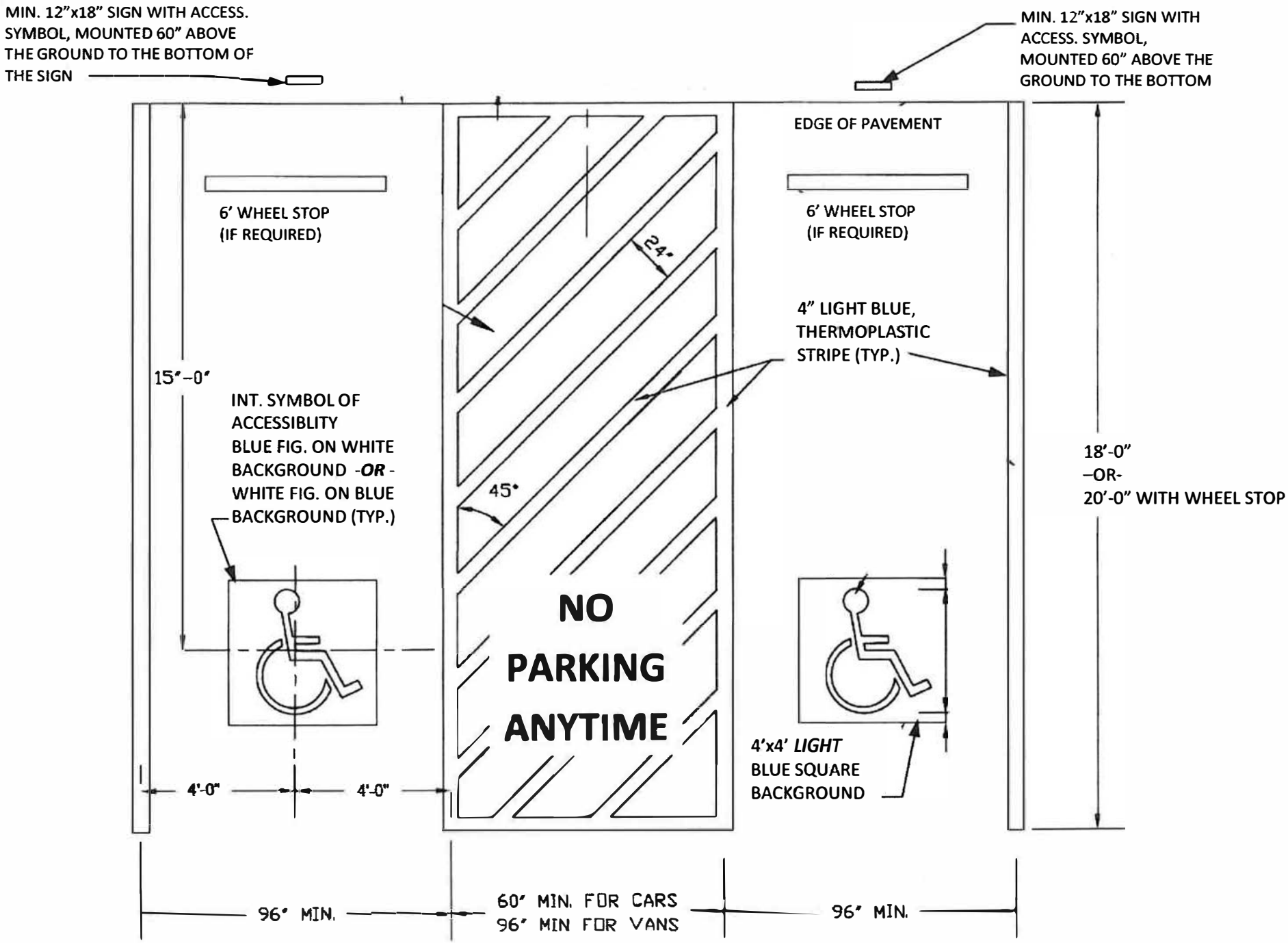
MIN. 12"x18" SIGN WITH ACCESS. SYMBOL, MOUNTED 60" ABOVE THE GROUND TO THE BOTTOM OF THE SIGN
MIN. 12"x18" SIGN WITH ACCESS. SYMBOL, MOUNTED 60" ABOVE THE GROUND TO THE BOTTOM
EDGE OF PAVEMENT
6' WHEEL STOP (IF REQUIRED)
6' WHEEL STOP (IF REQUIRED)
24"
4" LIGHT BLUE, THERMOPLASTIC STRIPE (TYP.)
15'-0"
INT. SYMBOL OF ACCESSIBLITY BLUE FIG. ON WHITE BACKGROUND -OR- WHITE FIG. ON BLUE BACKGROUND (TYP.)
45°
18'-0" -OR- 20'-0" WITH WHEEL STOP
NO PARKING ANYTIME
4'x4' LIGHT BLUE SQUARE BACKGROUND
4'-0"
4'-0"
96" MIN.
60" MIN. FOR CARS
96" MIN FOR VANS
96" MIN.

APRON GEOMETRY

SEE DIVISION OF ENGINEERING, ENTRANCE DETAILS (STANDARD DRAWINGS-ATTACHED)

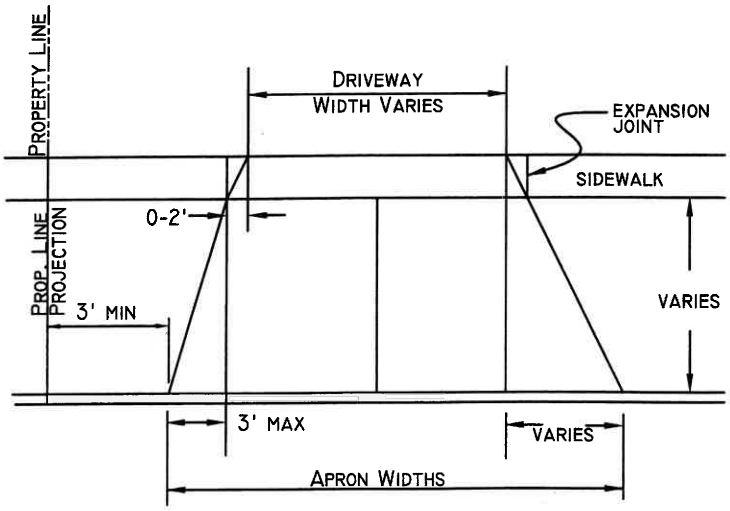

CURRENT STANDARD

CLASSIFICATION	DRIVEWAY	APRON
SINGLE RESIDENTIAL	12'	18'
DOUBLE OR JOINT RESIDENTIAL	20'	26'
NONRESIDENTIAL	30'	40'

PROPOSED STANDARD

CLASSIFICATION	DRIVEWAY	STANDARD APRON	ALTERNATE APRON
SINGLE RESIDENTIAL	12'	3' STRAIGHT FLARE = 18' CURB CUT	—
DOUBLE OR JOINT RESIDENTIAL	20'	3' STRAIGHT FLARE = 26' CURB CUT	—
NONRESIDENTIAL	30'	5' STRAIGHT FLARE = 40' CURB CUT	10' RADIAL FLARE = 50' CURB CUT
COMMERCIAL LOADING	30'	15' STRAIGHT FLARE = 60' CURB CUT	20' RADIAL FLARE = 70' CURB CUT
INDUSTRIAL	40'	20' STRAIGHT FLARE = 80' CURB CUT	25' RADIAL FLARE = 90' CURB CUT

VERTICAL ALIGNMENT

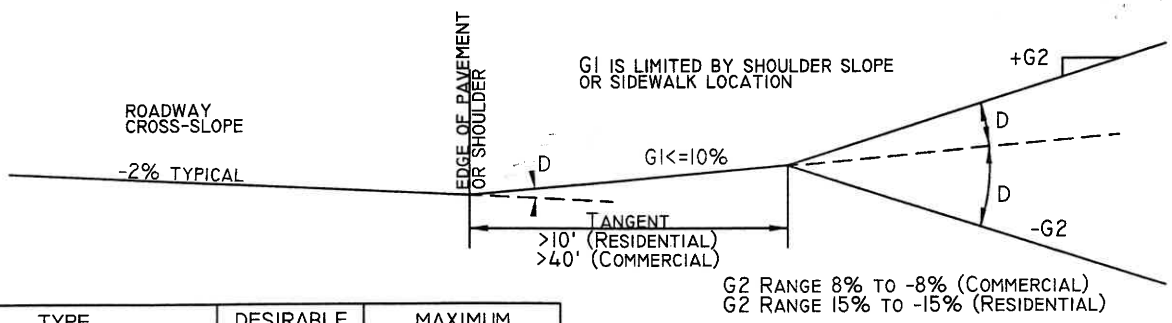

TYPE	DESIRABLE (D)	MAXIMUM (D)
HIGH VOLUME DRIVEWAY	0%	+/- 3%
LOW VOLUME DRIVEWAY ON MAJOR OR COLLECTOR STREETS	+/- 3%	+/- 6%
LOW VOLUME DRIVEWAY ON LOCAL STREETS	+/- 6%	+/- 15% CONTROLLED BY VEHICLE CLEARANCE

*IF A GRADE CHANGE GREATER THAN 15% IS NECESSARY, AT LEAST A 10' VERTICAL CURVE MUST BE USED TO TRANSITION BETWEEN SLOPES.

EXAMPLE:

G1= +3%
G2= -10%

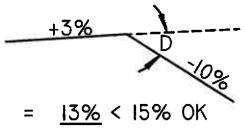

D = (G1) - (G2)
= (3) - (-10) = 13% < 15% OK

MAXIMUM ALLOWABLE APRON AND DRIVEWAY WIDTHS

CLASSIFICATION	DRIVEWAY	APRON
SINGLE RESIDENTIAL	12'	18'
DOUBLE OR JOINT RESIDENTIAL	20'	26'

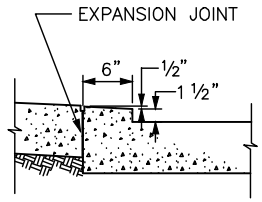

SECTION A–A

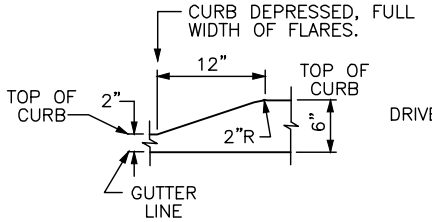

SECTION B–B

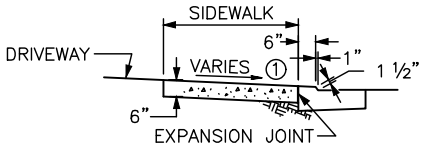

SECTION D–D

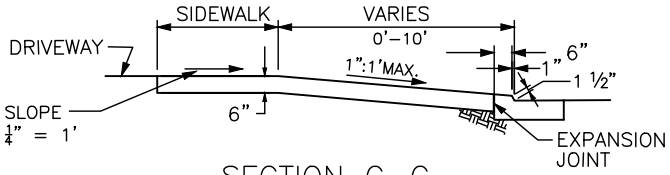

SECTION C–C

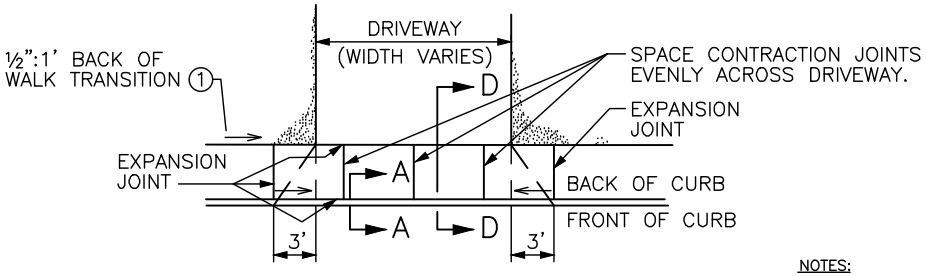

ENTRANCE WITHOUT UTILITY STRIP

NOTES:

1. DROP BACK OF SIDEWALK GRADE 1 ½" OVER 3' TO PROVIDE A MAXIMUM SLOPE OF 1":1'.
2. PROVIDE A SAWED JOINT ALONG CENTER LINE OF APRON.
3. MAXIMUM DROP AT BACK OF SIDEWALK SHALL NOT EXCEED 1 ½".
4. MAXIMUM CROSS SLOPE ON SIDEWALK SHALL NOT EXCEED ¼" = 1'
5. MAXIMUM SLOPE ON APRON SHALL NOT EXCEED 1":1' (8.3%).
6. ENTIRE APRON FROM BACK OF CURB TO BACK OF SIDEWALK SHALL BE CONSTRUCTED WITH A SINGLE POUR.
7. ALL EXPANSION JOINTS SHALL BE FULL DEPTH.

STREET WITH PARKING LANE

STREET WITHOUT PARKING LANE

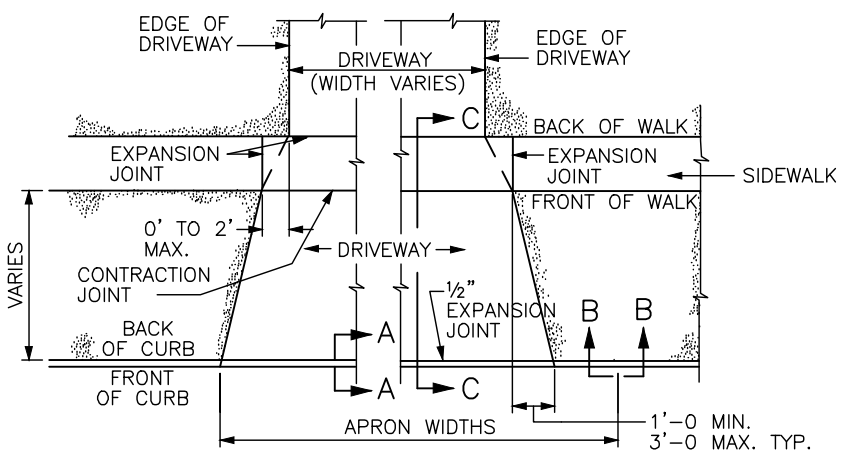

ENTRANCE WITH UTILITY STRIP

NOTE:
FOR USE WITH 6" HEADER CURB OR 6" CURB AND GUTTER

BASED ON UTILITY STRIP WITH ½":1' CROSS SLOPE

UTILITY STRIP WIDTH	DROP BACK OF 4' SIDEWALK	SIDEWALK SLOPE	SLOPE ON APRON
0'	1 ½"	7.29%	N/A
2'	1 ½"	5.21%	8.33%
4'	1 ½"	3.12%	8.33%
5'	1 ½"	2.08%	8.33%
6'	1"	2.08%	8.33%
8'	0"	2.08%	8.33%
10'	0"	2.08%	7.50%

BASED ON UTILITY STRIP WITH ¼":1' CROSS SLOPE

UTILITY STRIP WIDTH	DROP BACK OF 4' SIDEWALK	SIDEWALK SLOPE	SLOPE ON APRON
0'	1 ½"	7.29%	N/A
2'	1 ½"	4.17%	8.33%
3'	1 ½"	2.60%	8.33%
4'	1"	2.08%	8.33%
6'	0"	2.08%	7.64%
8'	0"	2.08%	6.25%
10'	0"	2.08%	5.42%

LEXINGTON

DIVISION OF ENGINEERING

RESIDENTIAL ENTRANCE DETAILS

STANDARD DRAWING NO. 307–1

APPROVAL:

URBAN COUNTY ENGINEER — DATE 9/22/17

COMMISSIONER — DATE 9/22/17

MAXIMUM ALLOWABLE APRON AND DRIVEWAY WIDTHS

CLASSIFICATION	DRIVEWAY	STANDARD APRON	ALTERNATE APRON
NON–RESIDENTIAL	30'	5' STRAIGHT FLARE=40' CURB CUT	10' RADIAL FLARE=50' CURB CUT
COMMERCIAL LOADING	30'	15' STRAIGHT FLARE=60' CURB CUT	20' RADIAL FLARE=70' CURB CUT
INDUSTRIAL	40'	20' STRAIGHT FLARE=80' CURB CUT	25' RADIAL FLARE=90' CURB CUT

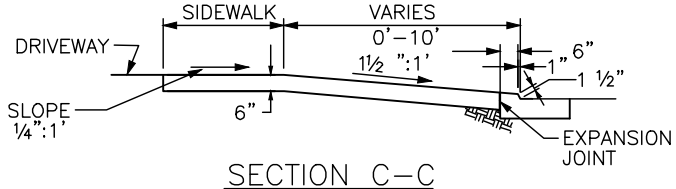

SECTION C–C

FRONT OF SIDEWALK ELEVATION DETERMINED BY ADDING ½": 1' ACROSS UTILITY STRIP FROM TOP OF CURB. IF COMING OFF 1½" LIP ADD ANOTHER 4½" TO DETERMINE ELEVATION AT FRONT OF SIDEWALK.

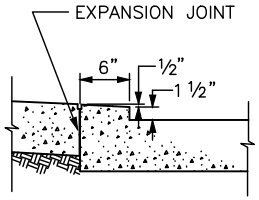

SECTION A–A

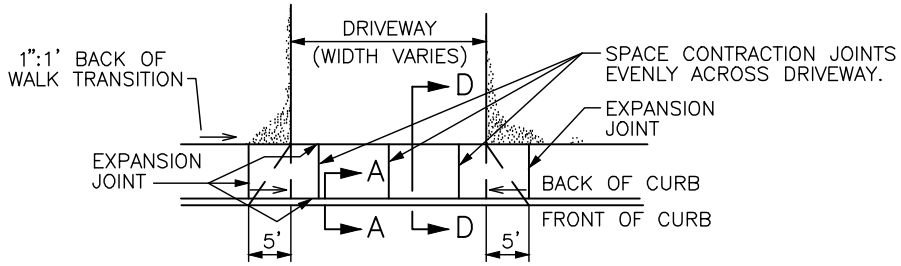

ENTRANCE WITHOUT UTILITY STRIP

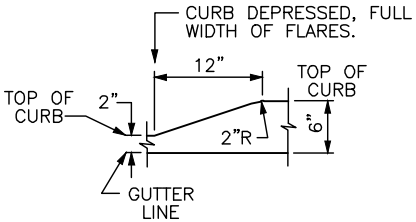

SECTION B–B

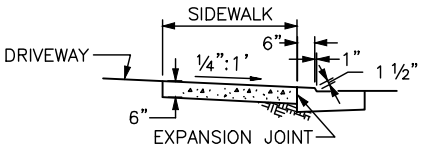

SECTION D–D

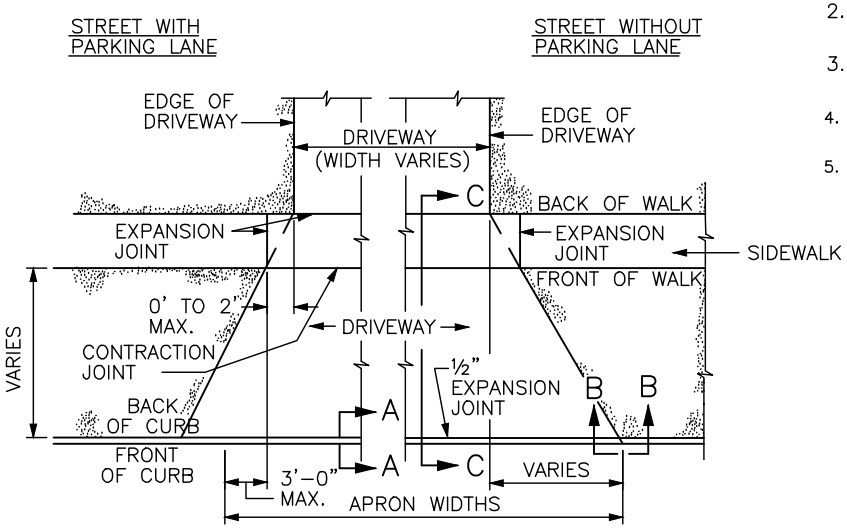

ENTRANCE WITH UTILITY STRIP

NOTES:

1. PROVIDE A SAWED JOINT ALONG CENTER LINE OF APRON.
2. MAXIMUM CROSS SLOPE ON SIDEWALK SHALL NOT EXCEED ¼":1'
3. MAXIMUM SLOPE ON APRON SHALL NOT EXCEED 1½":1'.
4. NO CATCH BASINS WILL BE PUT IN APRONS.
5. ALL EXPANSION JOINTS SHALL BE FULL DEPTH.

LEXINGTON

DIVISION OF ENGINEERING

COMMERCIAL
ENTRANCE DETAILS

STANDARD DRAWING NO. 307–2

APPROVAL:
URBAN COUNTY ENGINEER — DATE 9/22/17
COMMISSIONER — DATE 9/22/17

LOADING DOCK LAYOUT

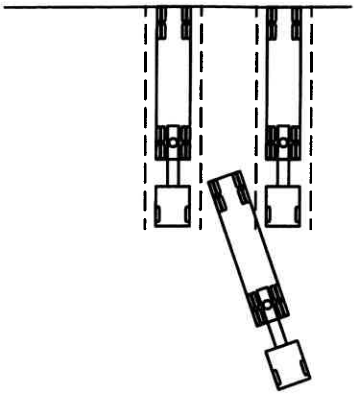

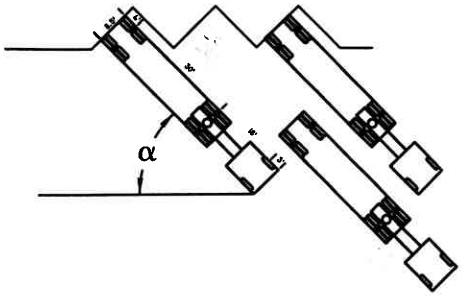

Design Vehicle	Length in Feet (L)	Dock Angle (α)	Clearance in Feet (D)	Berth Width in Feet (W)	Apron Space in Feet (A)	Total Offset in Feet (T)
WB-40	50	90°	50	10	63	113
				12	56	106
				14	52	102
		60°	44	10	46	90
				12	40	84
				14	35	79
		45°	36	10	37	73
				12	32	68
				14	29	65
WB-50	55	90°	55	10	77	132
				12	72	127
				14	67	122
		60°	48	10	55	103
				12	51	99
				14	46	94
		45°	39	10	45	84
				12	40	79
				14	37	76

Design Criterion	Size of Vehicle to be Accommodated in Feet		
	Automobile, Pickup & Panel	Single-Unit Truck	Tractor-Trailer Truck
Vertical clearance	____	13	14
Length	25	35	55*
Width	11	12	12
Dock height	2-2.5	3-4.2	4-4.4

* May need to accommodate trucks over 65 feet long.

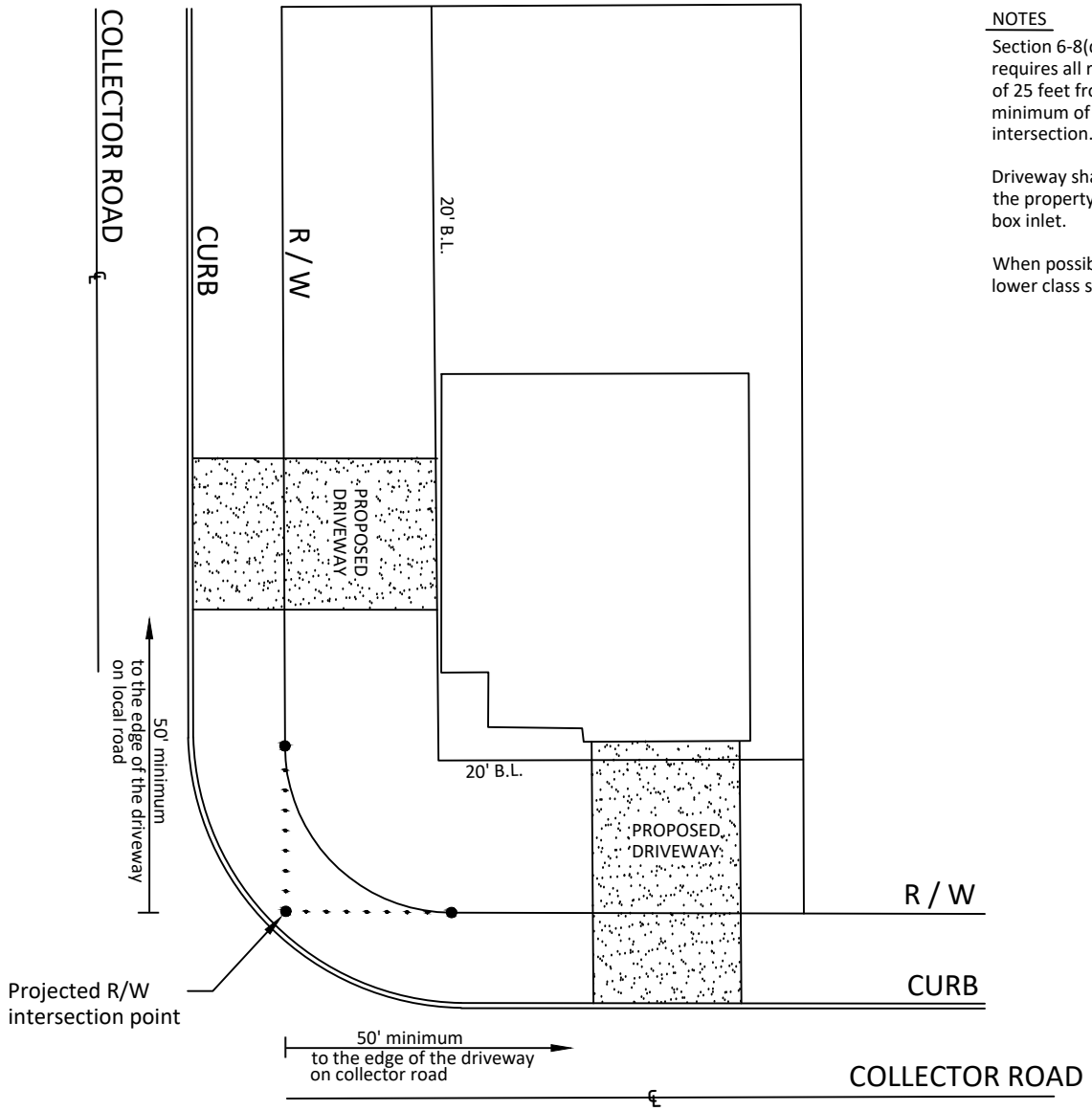

NOTES

Section 6-8(q)(3) of Land Subdivision Regulations requires all residential accesses to be a minimum of 25 feet from any local street intersection and a minimum of 50' from any collector street intersection.

Driveway shall not be placed closer than 3' from the property line or less than 3' from any curb box inlet.

When possible, driveway shall be placed on the lower class street with less traffic.

NTS

COLLECTOR / COLLECTOR CORNER LOT

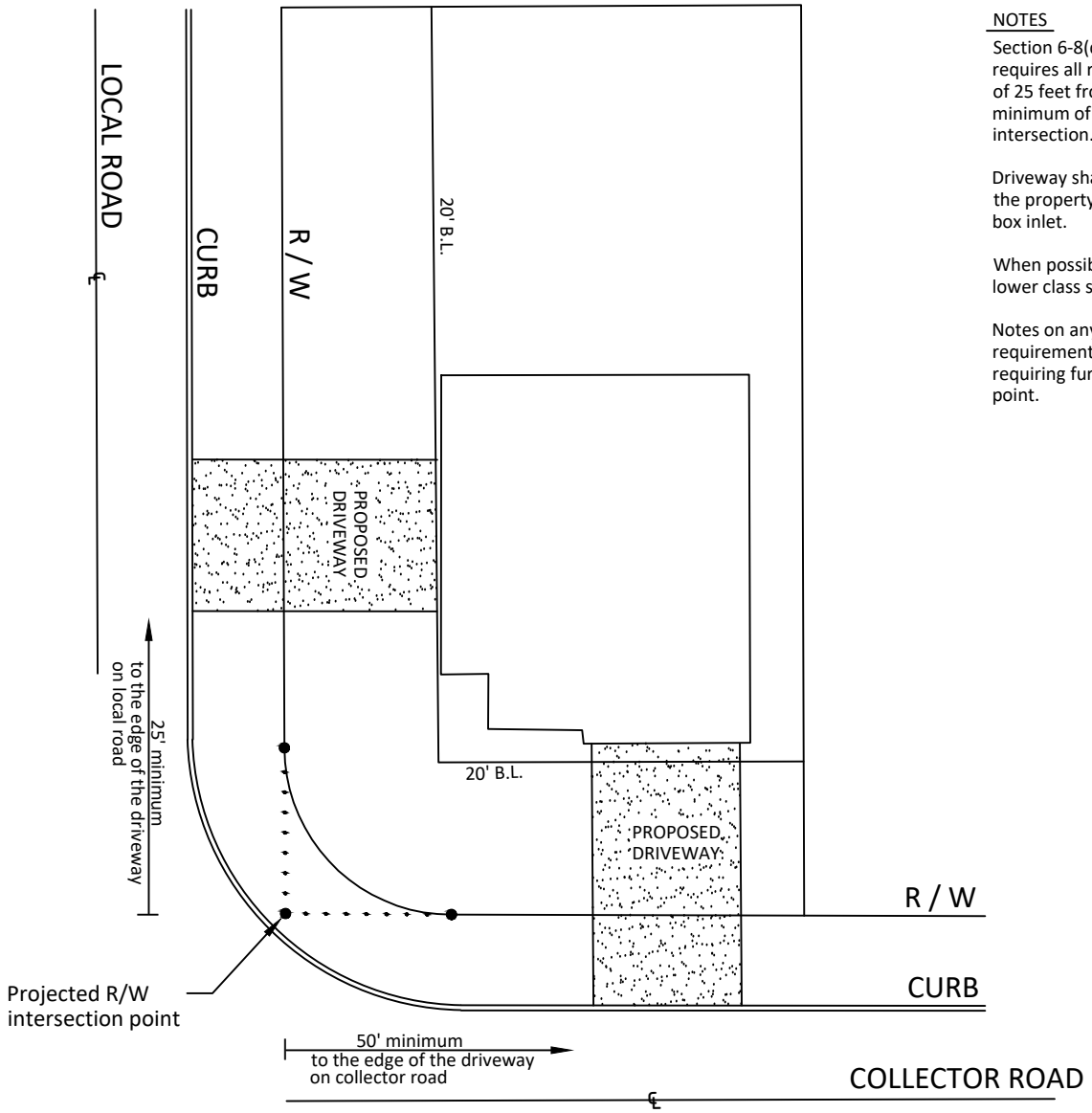

NOTES

Section 6-8(q)(3) of Land Subdivision Regulations requires all residential accesses to be a minimum of 25 feet from any local street intersection and a minimum of 50' from any collector street intersection.

Driveway shall not be placed closer than 3' from the property line or less than 3' from any curb box inlet.

When possible, driveway shall be placed on the lower class street with less traffic.

Notes on any Final Record Plat shall supercede all requirements and may be more restrictive thus requiring further distances from intersection point.

NTS

COLLECTOR / LOCAL CORNER LOT

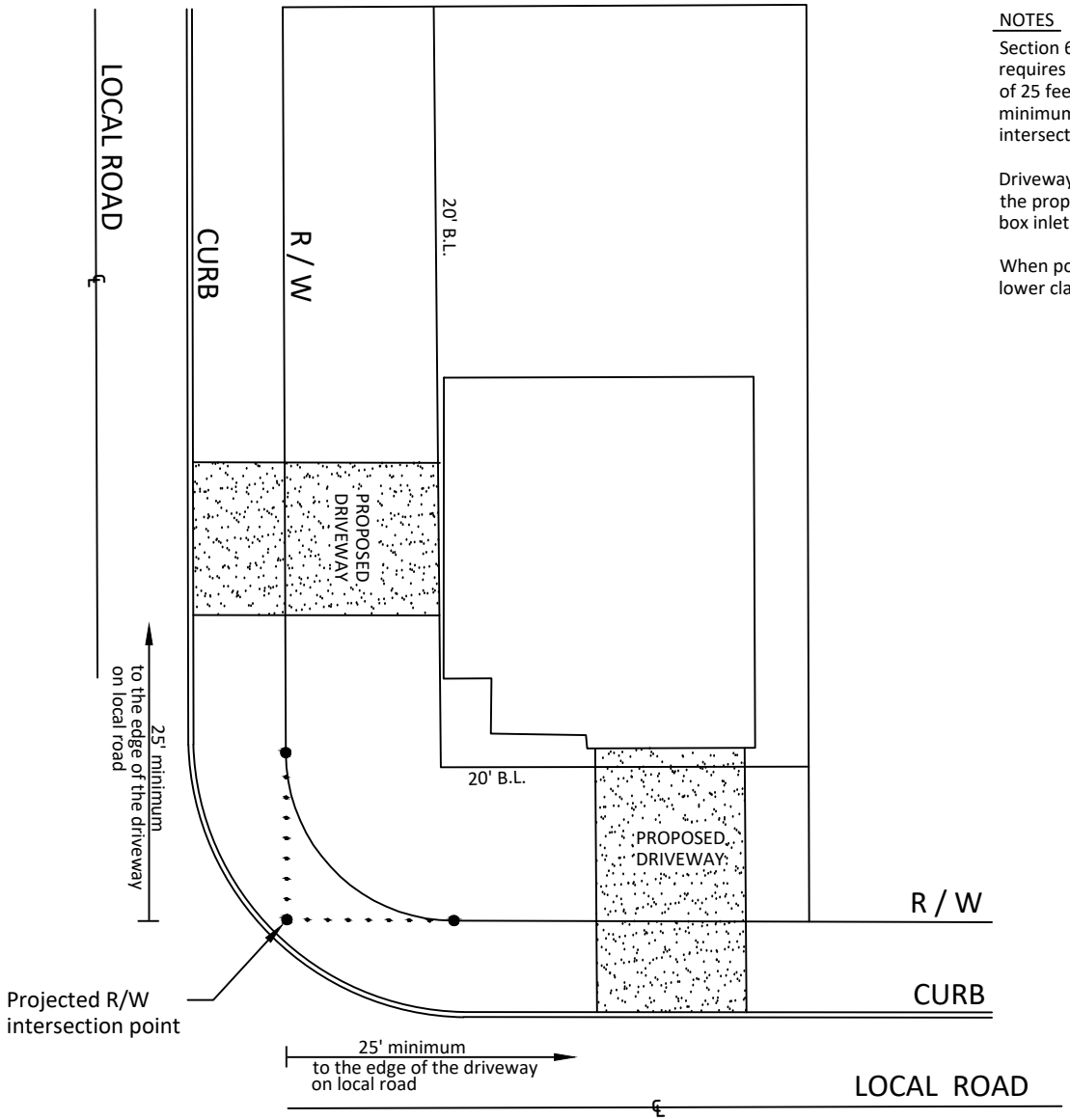

NOTES

Section 6-8(q)(3) of Land Subdivision Regulations requires all residential accesses to be a minimum of 25 feet from any local street intersection and a minimum of 50' from any collector street intersection.

Driveway shall not be placed closer than 3' from the property line or less than 3' from any curb box inlet.

When possible, driveway shall be placed on the lower class street with less traffic.

NTS

LOCAL / LOCAL CORNER LOT

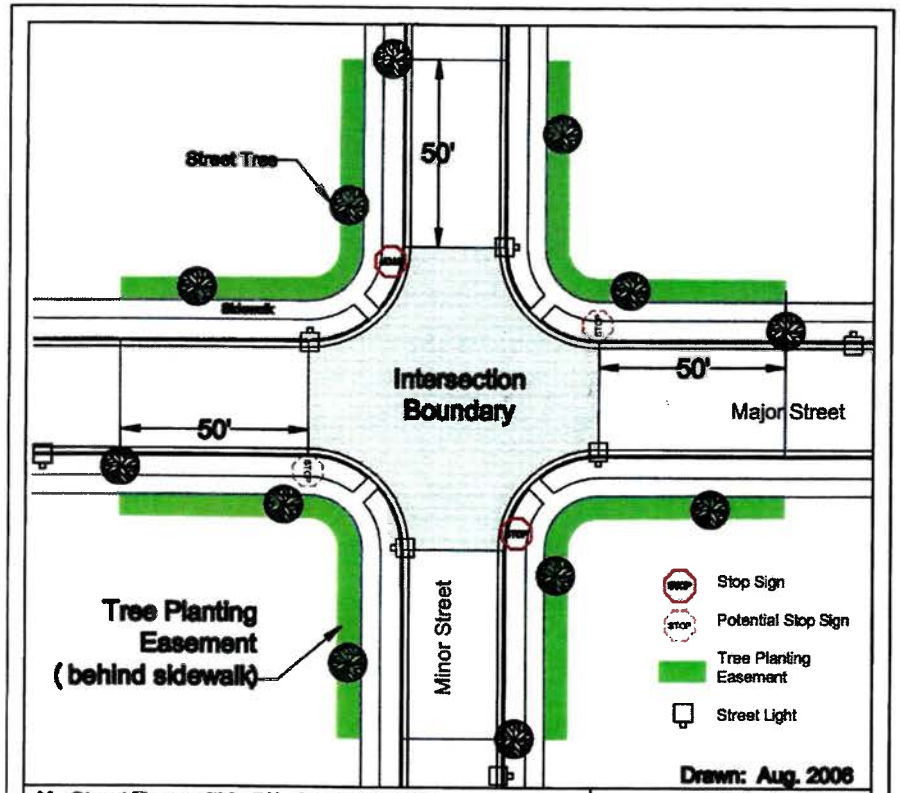

No Street Trees within 50' of an Intersection
References:
Code of Ordinances Sec.17B-2. Tree planting
Subdivision Regulations 6-10 (b) (2) Location Criteria

Typical Residential Intersection

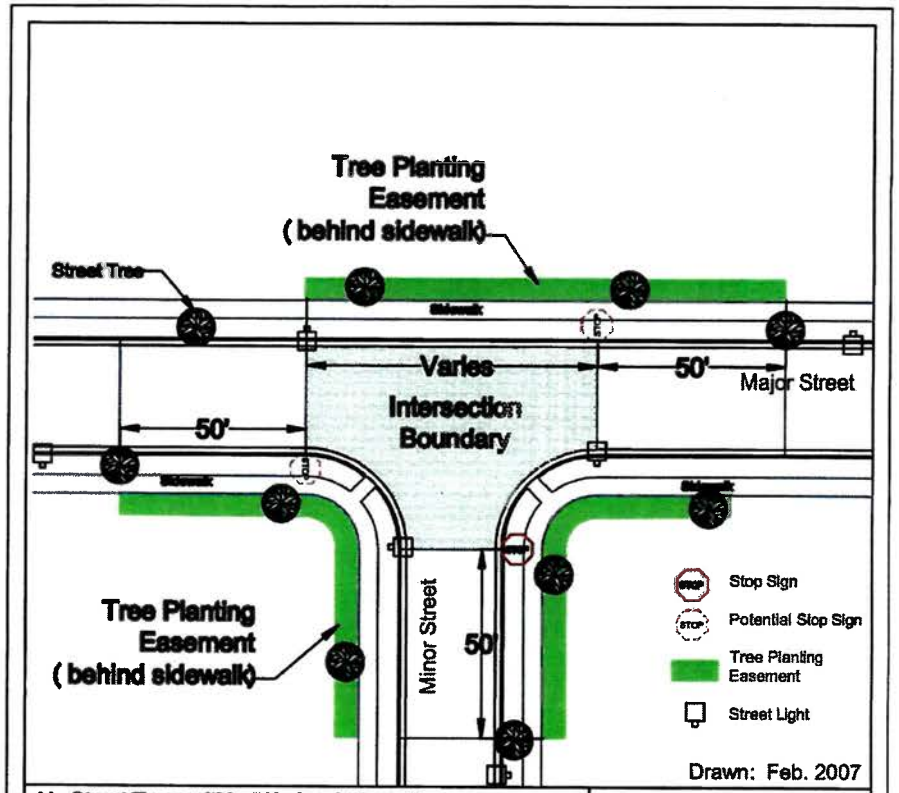

No Street Trees within 50' of an Intersection
References:
Code of Ordinances Sec.17B-2. Tree planting
Subdivision Regulations 6-10 (b) (2) Location Criteria

Typical Residential 'T'-Intersection

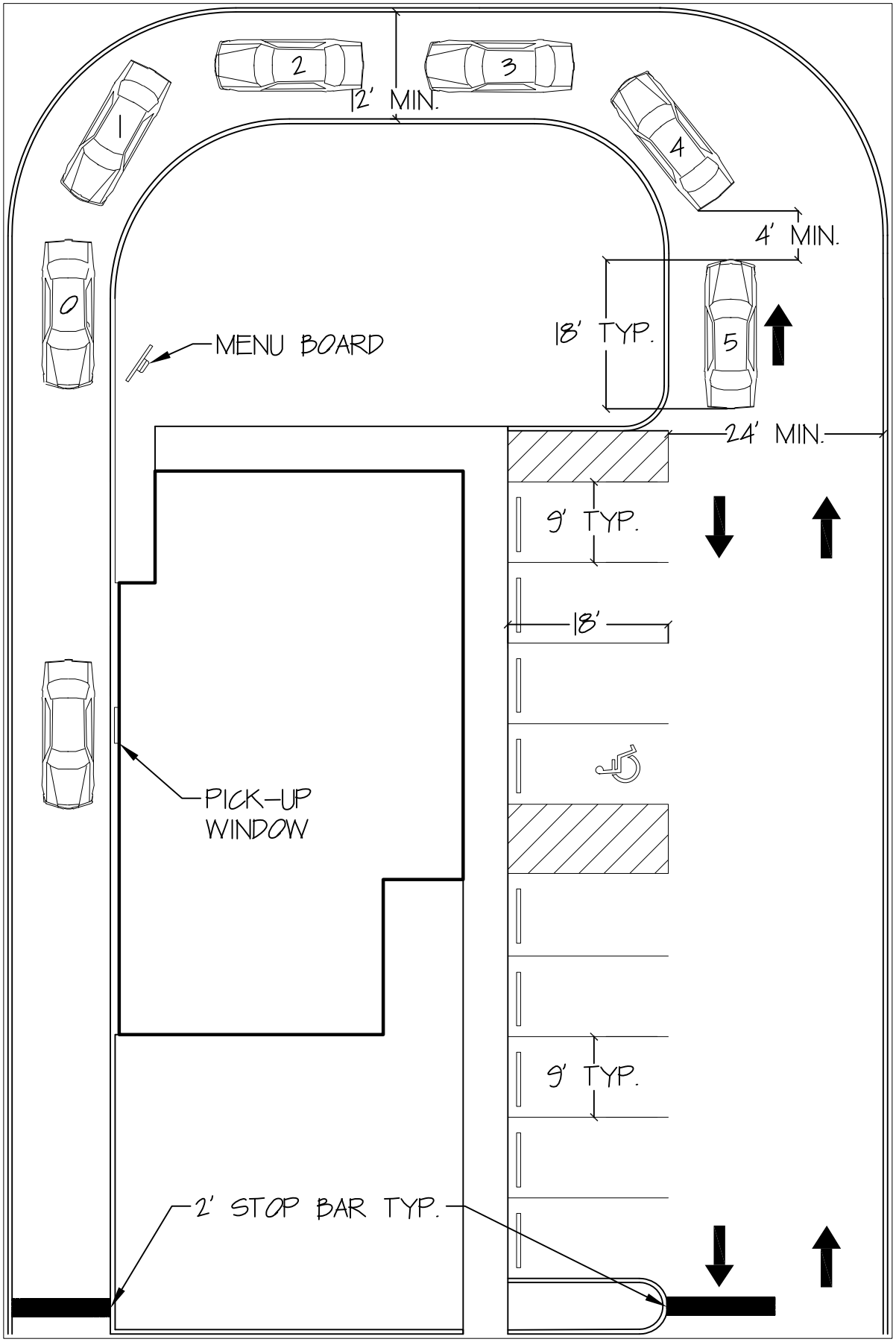
2
3
1
4
0
5
12' MIN.
4' MIN.
18' TYP.
MENU BOARD
24' MIN.
9' TYP.
18'
PICK-UP
WINDOW
9' TYP.
2' STOP BAR TYP.

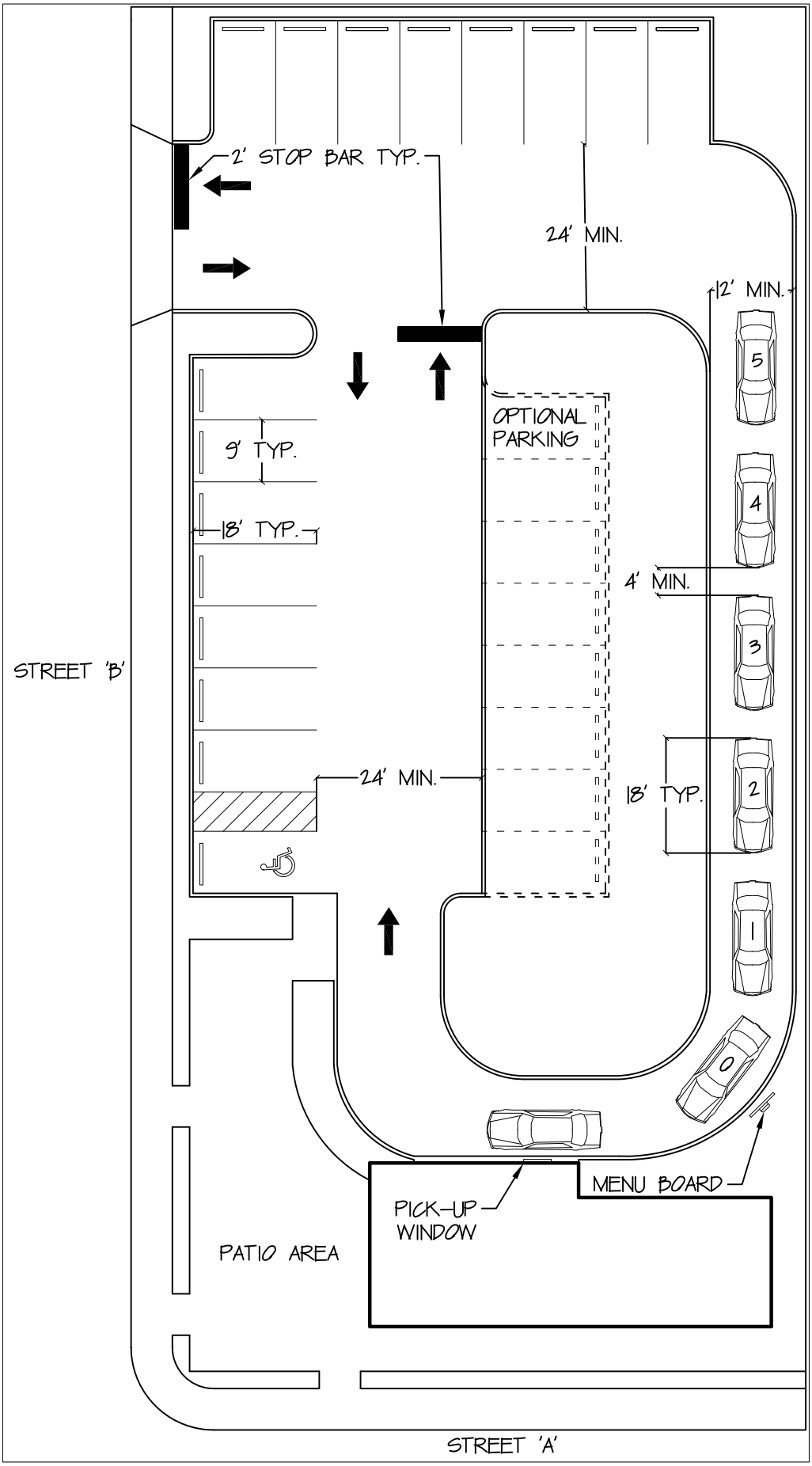
2' STOP BAR TYP.
24' MIN.
12' MIN.
OPTIONAL PARKING
9' TYP.
18' TYP.
4' MIN.
STREET 'B'
24' MIN.
18' TYP.
5
4
3
2
1
0
MENU BOARD
PICK-UP WINDOW
PATIO AREA
STREET 'A'

TURN LANE STANDARDS

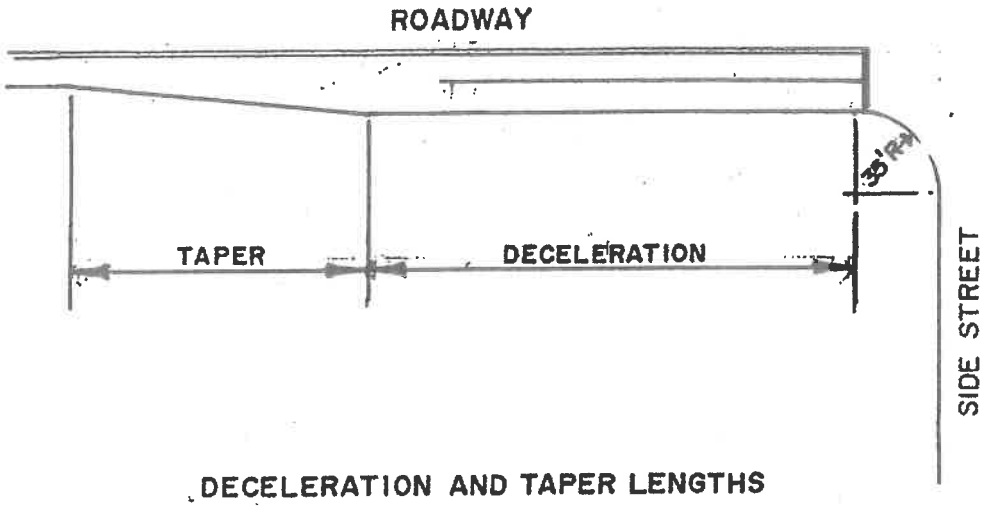

DECELERATION AND TAPER LENGTHS

RUNNING SPEED (MPH)	TAPER (FEET)	DECELERATION (FEET)	TOTAL (FEET)
20	96	64	160
25	96	109	205
30	96	154	250
35	117	193	310
40	138	232	370
45	159	276	435
50	180	320	500
55	201	364	565