Residential Decks

1 & 2 Family Dwellings and Townhouses

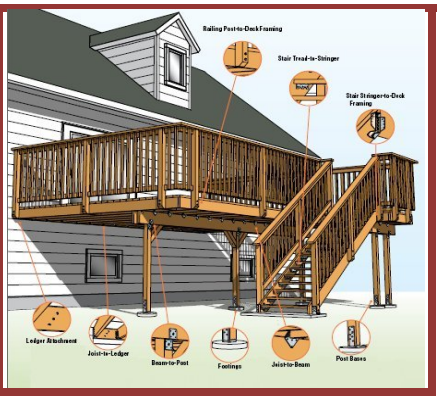

. While every attempt has been made to insure the correctness of this handout, no guarantees are made to its accuracy or completeness. Responsibility for compliance with applicable codes and ordinances falls on the owner or contractor. For specific questions regarding code requirements, refer to the applicable codes or contact your local Building Department.

Building Permits Requirements:
Building permits are required for the construction of all decks that are attached to the home and for freestanding decks that are 200 Sq Ft or more in area, serving the primary egress door, or elevated 30” or more above grade. Deck construction shall meet the requirements of the 2018 Kentucky Building Code which adopts and amends the 2015 International Residential Code.

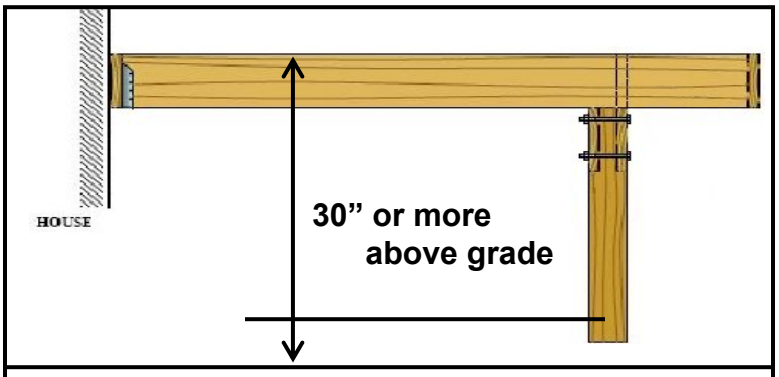

Zoning Requirements:
Decks are also required to meet the land use and setback requirements of the zoning code.

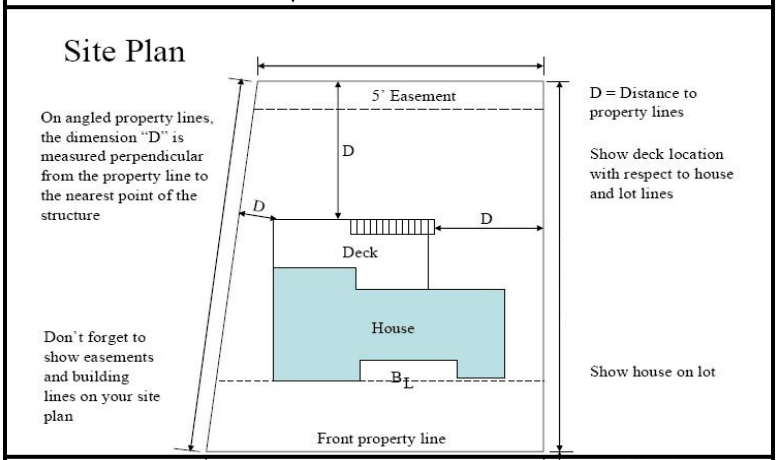

Plan Review & Inspections:
The plan is reviewed by the plans examiner in order to identify potential problems that may arise prior to construction. Construction inspections will be done during the project to ensure code compliance and that the materials used are installed correctly.

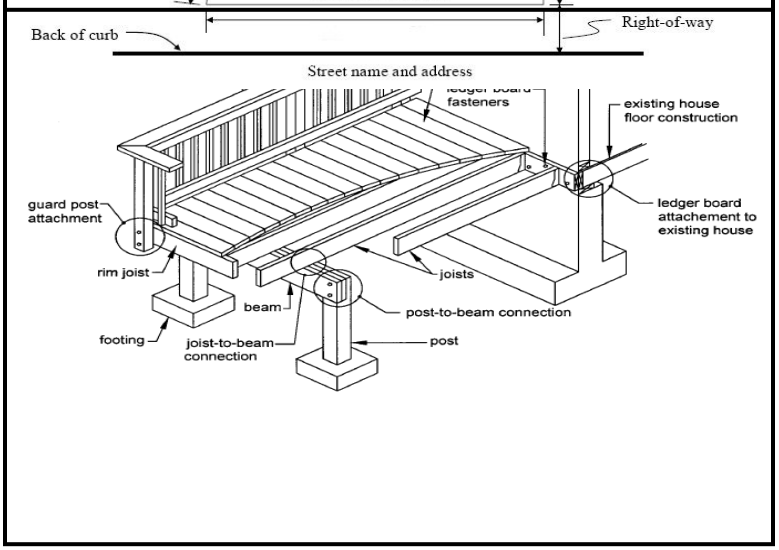

1/15/2019

Builders and homeowners are required to obtain a permit prior to constructing, altering or replacing a deck.

The following are examples of information that should be included on plans submitted for building permits for residential decks. They are ***examples*** only and should not be construed as being code compliant for every application. It is the responsibility of the homeowner or person preparing the plans to show in detail how they will build their deck. Some designs may require more detail than others.

Your deck plans should replicate exactly how you will build your deck. We will review your plans before we issue the building permit to verify code compliance before you start work. The more detailed your plans, the more likely you will avoid mistakes during construction.

Once your plans are approved, you should not change your design without approval by LFUCG Building Inspection Division. ***You should read through the approved plans to determine if the plan reviewer noted any corrections to your plan.*** If you have any questions regarding any of the corrections you should contact us before proceeding.

Permit holder is responsible for scheduling all inspections.

Plans created at home centers are seldom acceptable for plan review. These computer designs do not allow homeowners to duplicate actual conditions at their home. Some of these plans may be modified to include all necessary information prior to submittal. Applications submitted with these types of plans without additional modifications will be returned to the applicant.

THINK YOU MIGHT ENCLOSE YOUR DECK IN THE FUTURE?

Deck plans are approved on the assumption that the deck will be used only as a deck for the life of the structure. Because footing sizes, setbacks, structural supports and a host of other deck components are different for enclosed porches than for decks. It is important that you indicate on you plans the desire to convert the deck at a future date. You should then design your deck to carry future loads and meet setbacks and other rules.

TYPICAL DECK CROSS SECTION

Note: All flashing, fasteners and connectors must be compatible with materials used.

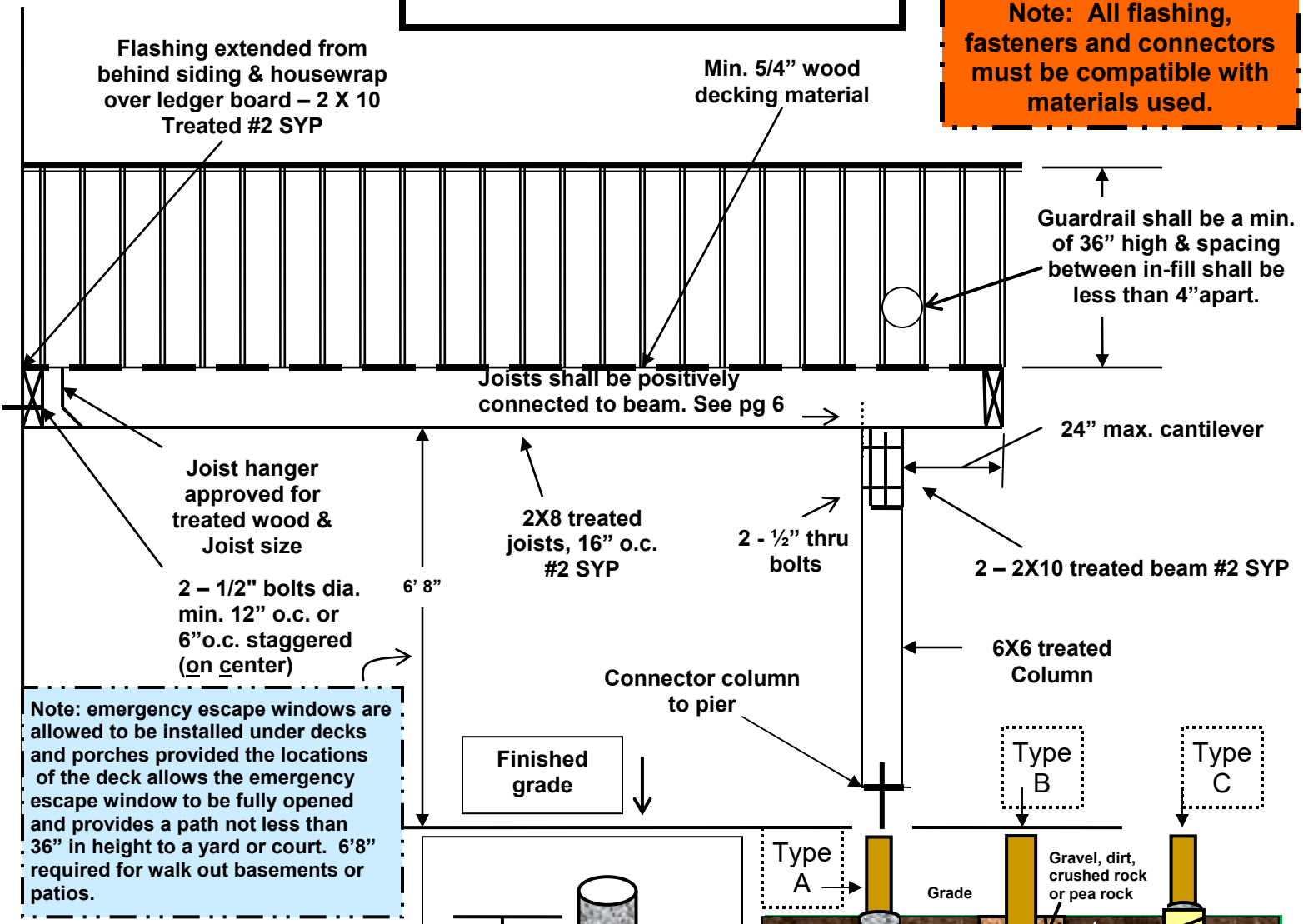

Note: emergency escape windows are allowed to be installed under decks and porches provided the locations of the deck allows the emergency escape window to be fully opened and provides a path not less than 36" in height to a yard or court. 6'8" required for walk out basements or patios.

FOOTINGS

BeFore you Dig Call 811for utility locations at least two working days ***before you dig*** - .

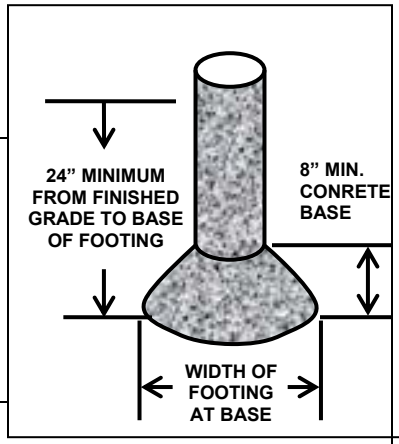

Footings supporting a 4x6 column must be not less than 14-inch diameter. Post footings supporting columns larger than 4x6 must be not less than 14-inch diameter. The bottom of post footings may be "belled" to achieve the desired minimum bearing area. The base of the footing must be at least 24 inches below finished grade. Care should be exercised to center the column on the footing. Posts imbedded in the ground must be labeled ground contact or equal. The use of a fiberboard tube will allow you to elevate the top of the footing above finished grade to provide protection of the wood post from lawn mowers and trimmers.

To accurately size footings, beams and joist refer to tables on pgs 11-13.

Beam and Footing Sizes

Maximum Joist Span

WARNING: THIS IS AN ILLUSTRATION ONLY. IT IS INTENDED TO SHOW SOME OF THE INFORMATION THAT SHOULD BE INCLUDED ON YOUR DECK PLANS. IT IS NOT INTENDED TO SHOW COMPLIANCE WITH ANY CODES THAT MAY APPLY. CHANGES IN THE HEIGHT AND SIZE OF A DECK WILL CAUSE VARIATIONS IN CODE REQUIREMENTS.

DECK FRAMING

Ledger Board Connection

The ledger board attaches to the house frame or foundation. ***Make sure the ledger is securely attached to the dwelling. The 2018 KRC now requires a lateral restraint*** (See Page 13) ***connection system on all ledgers attached to the house. Install metal flashing at top, and caulk sides and bottom.***

General Attachment of Ledger Board to House Band Joist/Rim Board

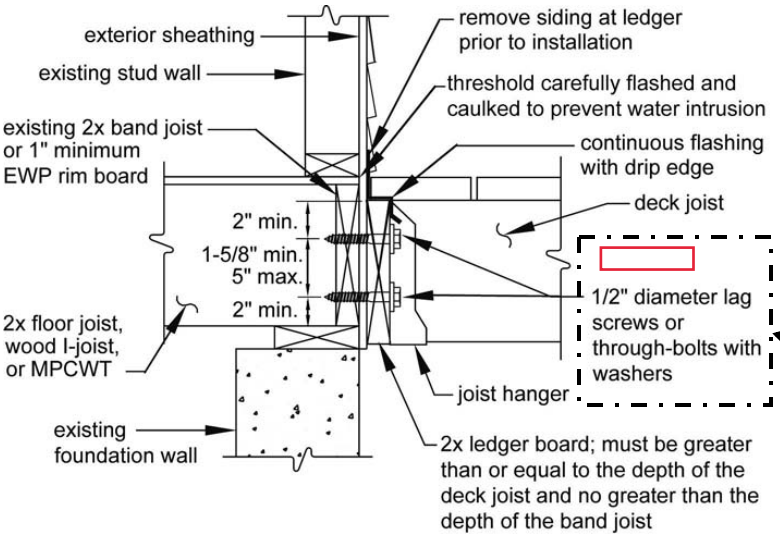

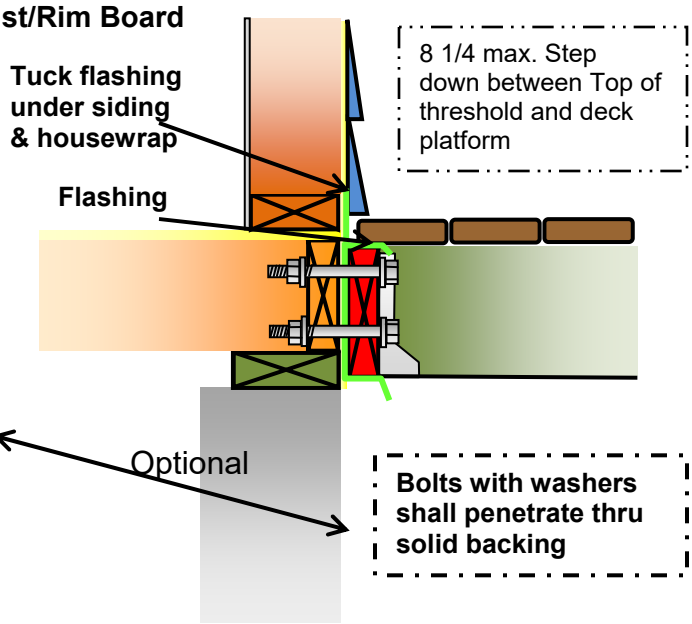

CONCEALED FLANGE HANGER

CONVENTIONAL HANGER

No Attachment to or Through Exterior Veneers (Brick, Masonry, Stone)

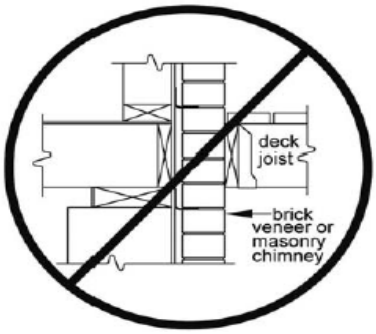

Metal Plate Connected (MPC) Wood Floor Trusses with a 2x4 Lumber "Ribbon" at the Ends of the Trusses

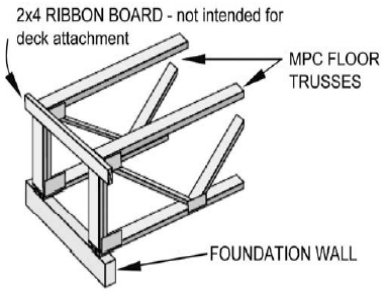

No Attachment to Over Hangs

Understanding Load Paths

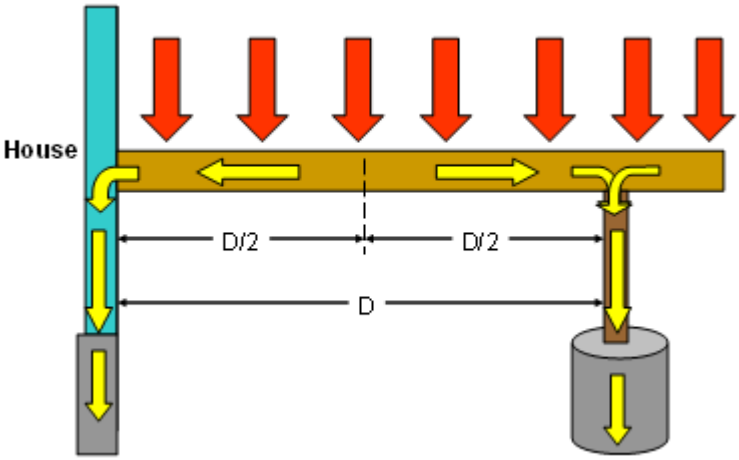

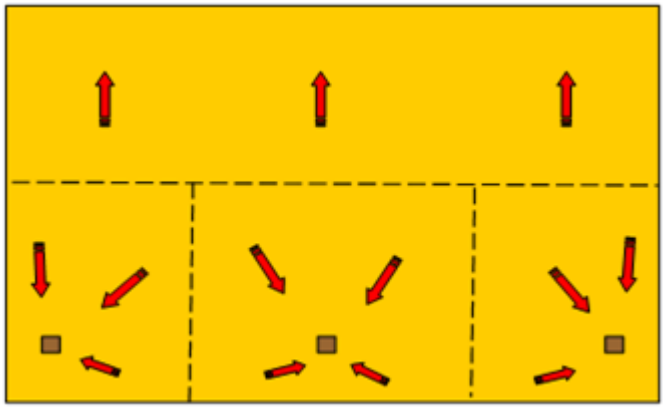

Tributary load area for posts

B = Beam span
C = Joist span

Tributary is half the distance: of the joist or to the post.

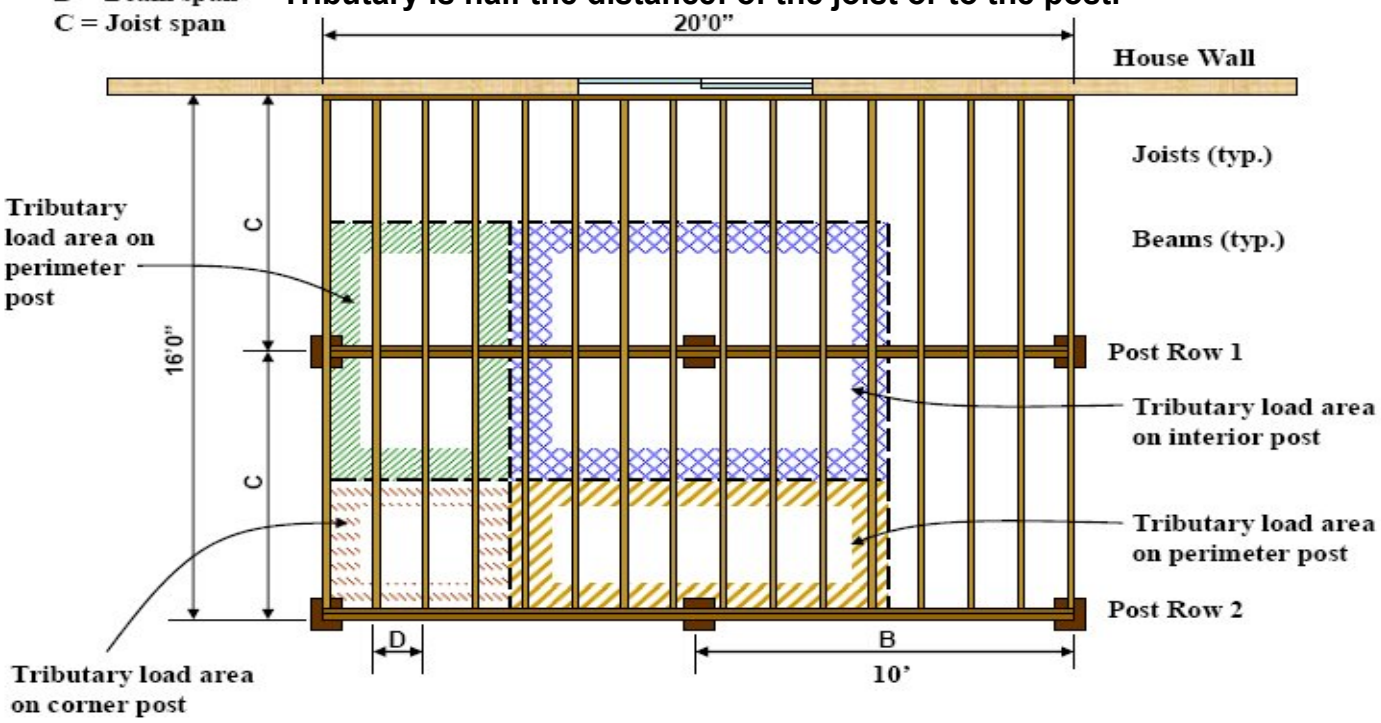

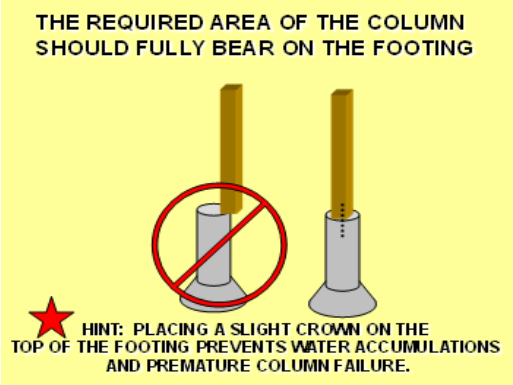

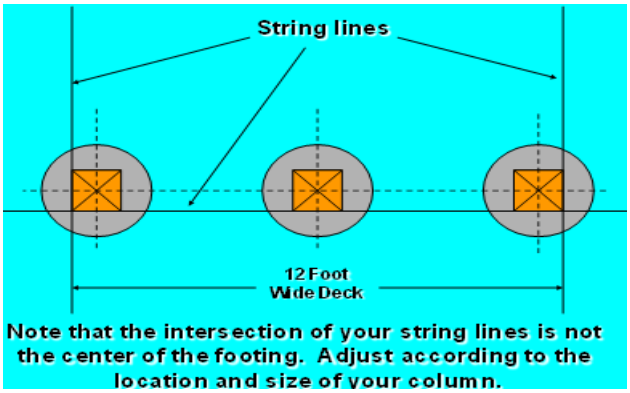

Attaching: Beam to Post Illustrations

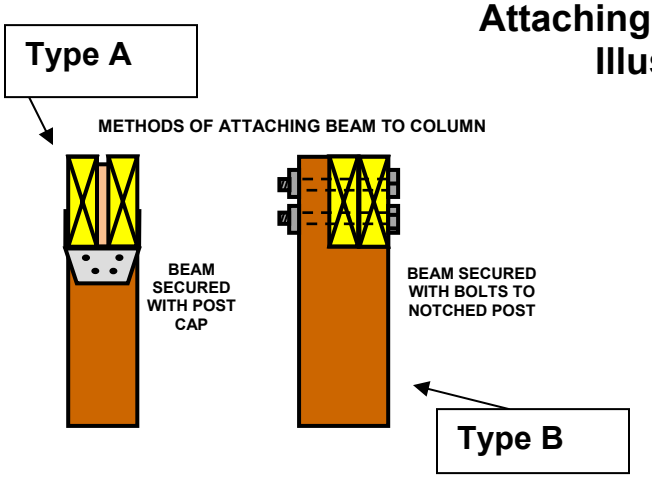

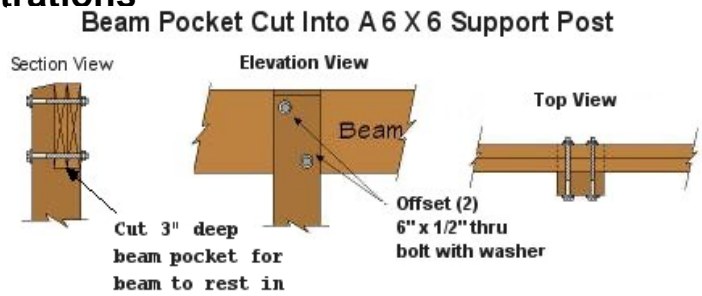

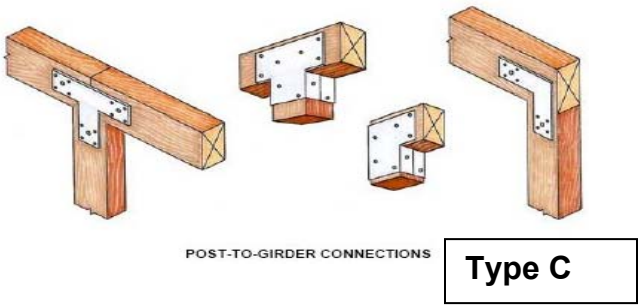

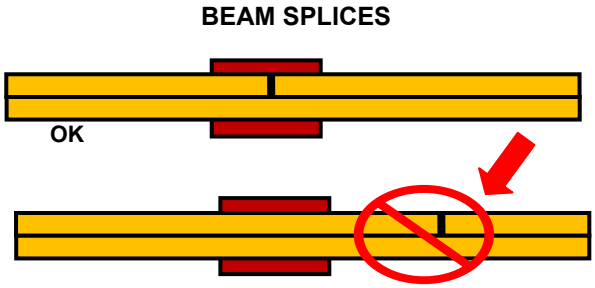

Construct the beam using two or more 2 inch nominal pieces of lumber. Nail the beam together using 10d - 16d nails at 16 inches o.c. along each edge of the beam. A spacer may be used to fir the beam to a 3½ -inch width. Beams should be installed with any arch or crown facing up.

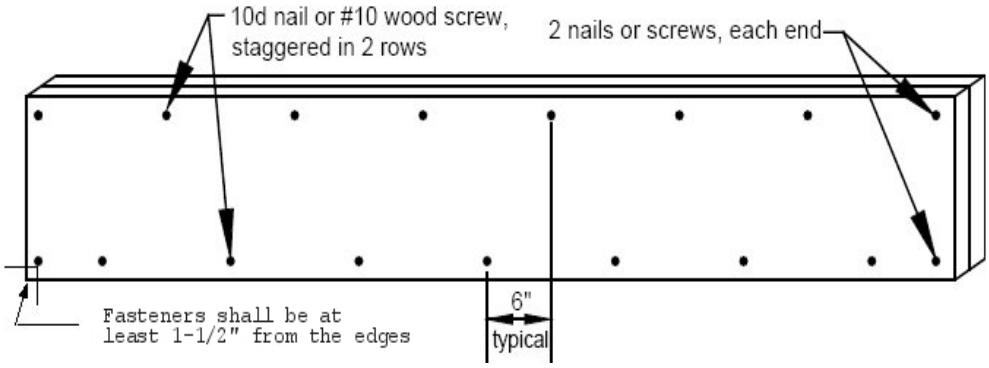

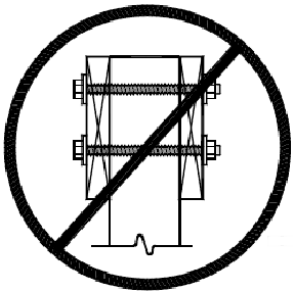

JOIST-TO-BEAM CONNECTION

Each joist shall be attached to the beam as shown. Use Option 1 or Option 2 when joists bear on or overhang past the beam. Use Option 3 when joists attach to the side of the beam.

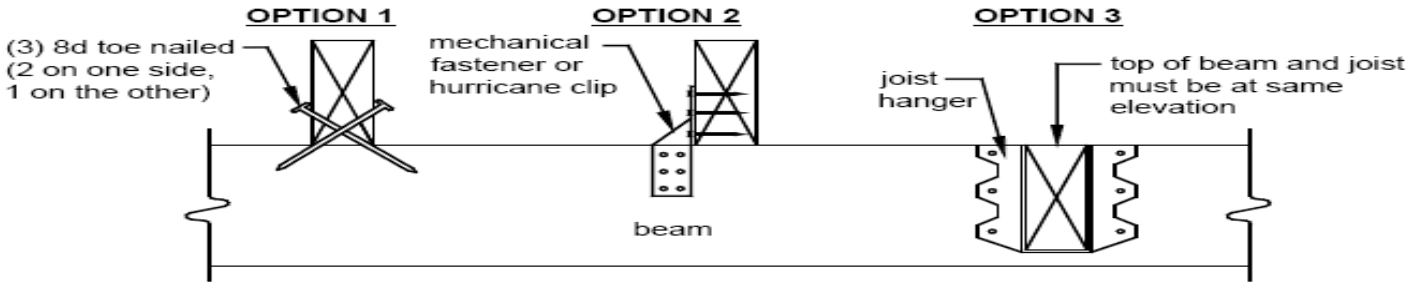

Cantilever Options

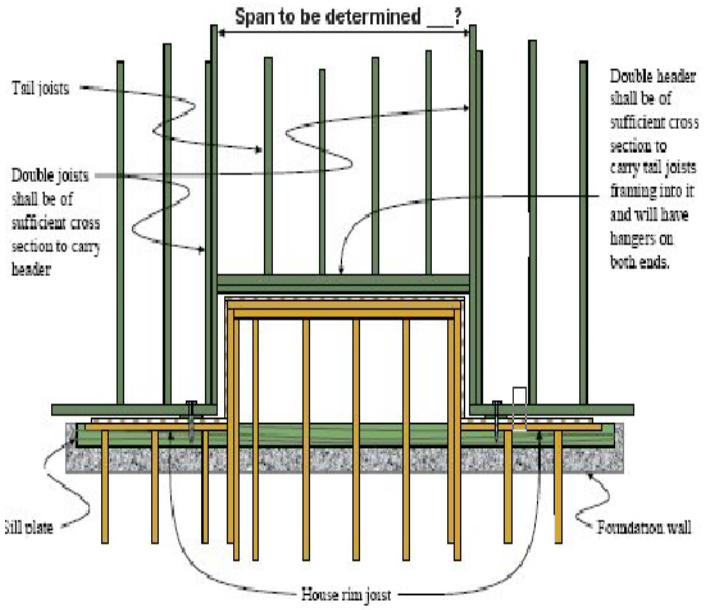

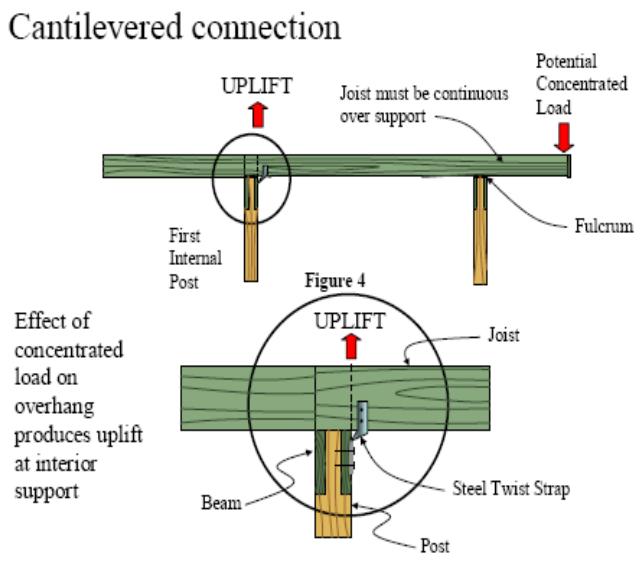

All thru bolts and lag screws shall be installed with washers.

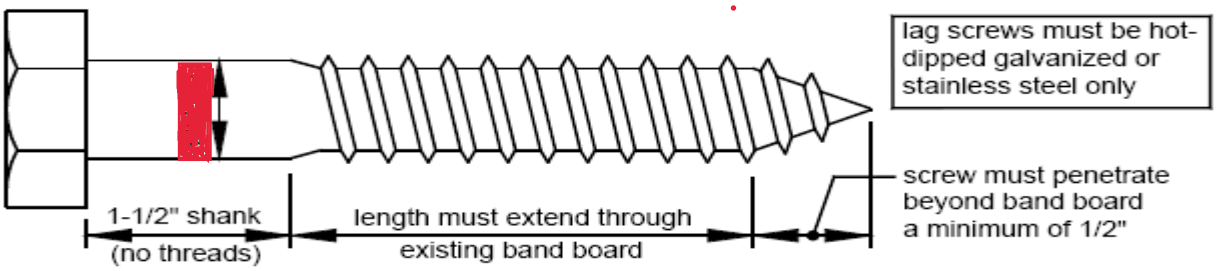

Lag screws or bolts shall be placed two inches from the bottom and top of deck ledgers and between two to five inches from the ends. Lag screws or bolts shall be staggered from the top to the bottom along the horizontal run of the deck ledger.

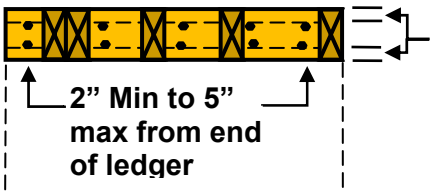

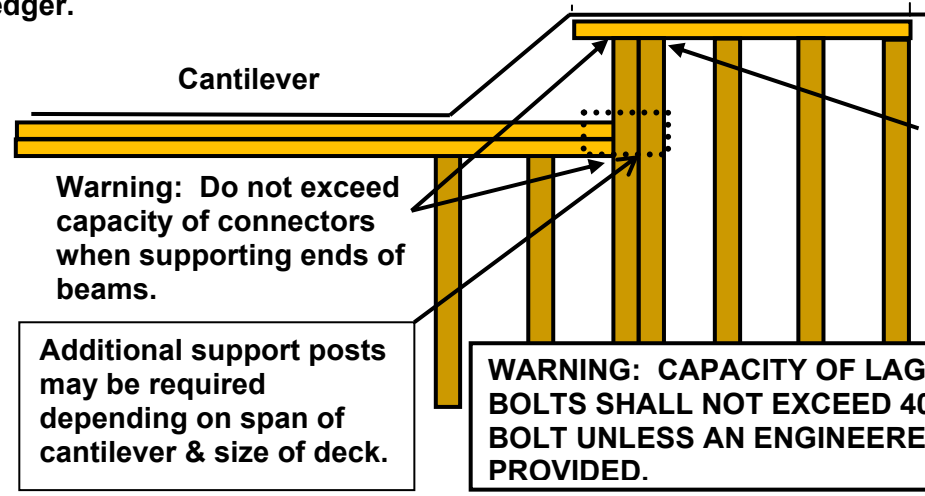

WARNING: CAPACITY OF LAG OR CARRIAGE BOLTS SHALL NOT EXCEED 400 LB'S PER BOLT UNLESS AN ENGINEERED DESIGN IS PROVIDED.

A TYPICAL STAIR FRAMING DETAIL

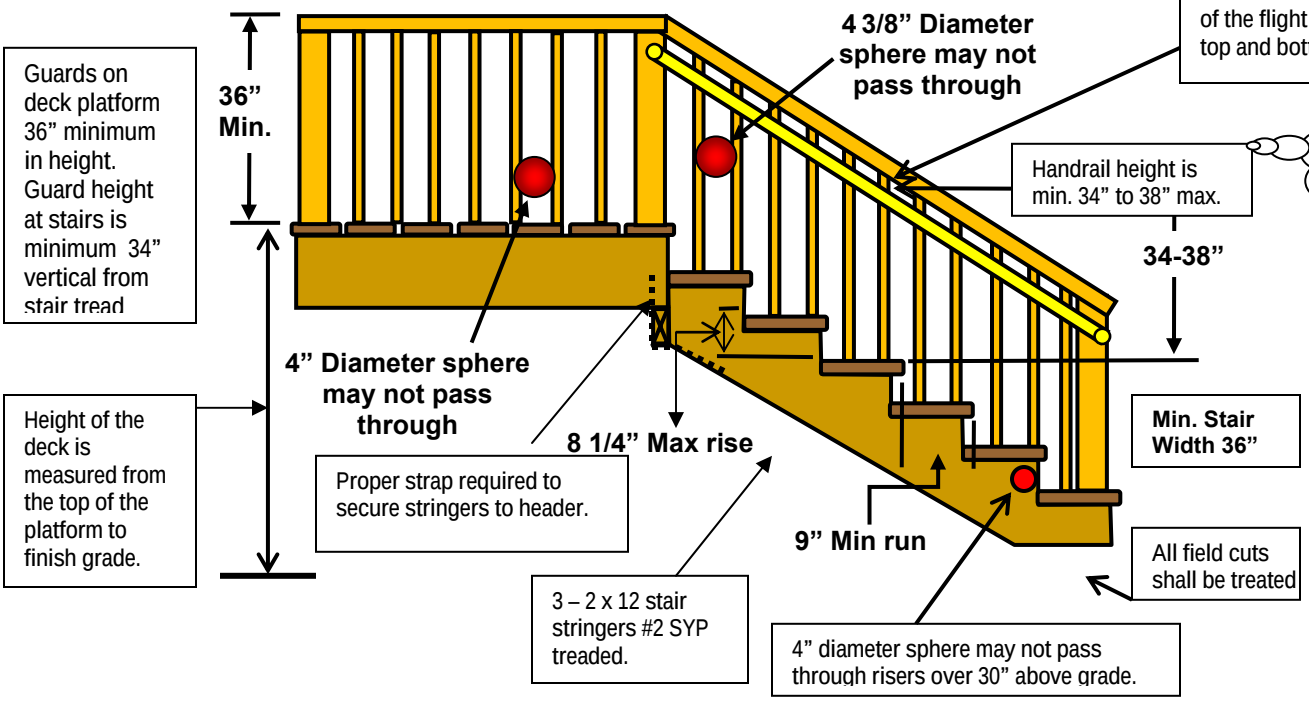

Stairway illumination. All interior and exterior stairways shall be provided with a means to illuminate the stairs, including the landings and treads. The illumination of exterior stairways shall be controlled from inside the dwelling unit. Lights that are continuously illuminated or automatically controlled can be used. Solar lighting is NOT approved. ★★

Reinforced Post Connections (Three dimensional view)

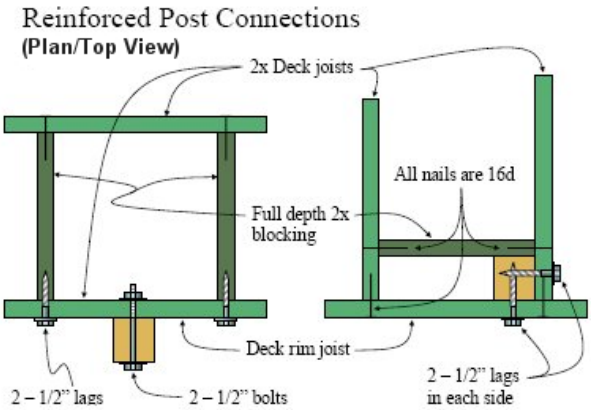

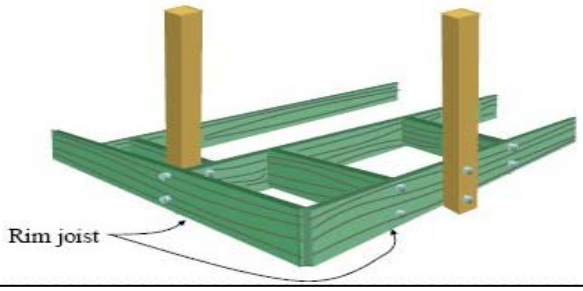

The leverage from a deck railing post will twist the rim joist unless the rim joist is securely fastened to the joist end or perpendicular blocking. ½" lag screws or thru bolts are recommended for resisting code design loads.

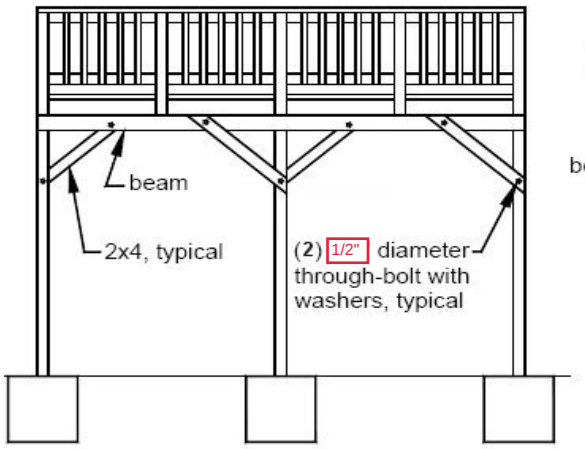

BRACING PARALLEL TO BEAM

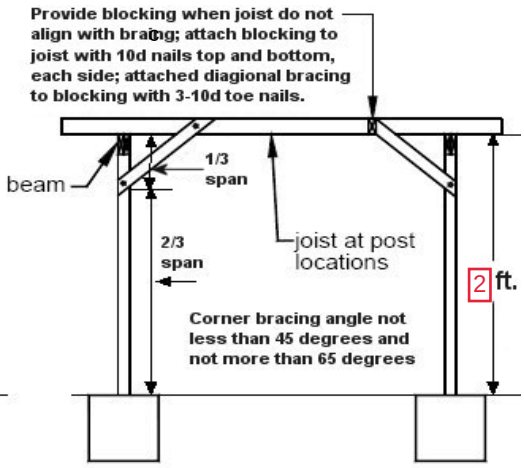

BRACING PERPENDICULAR TO BEAM

Possible handrail solutions at stairs

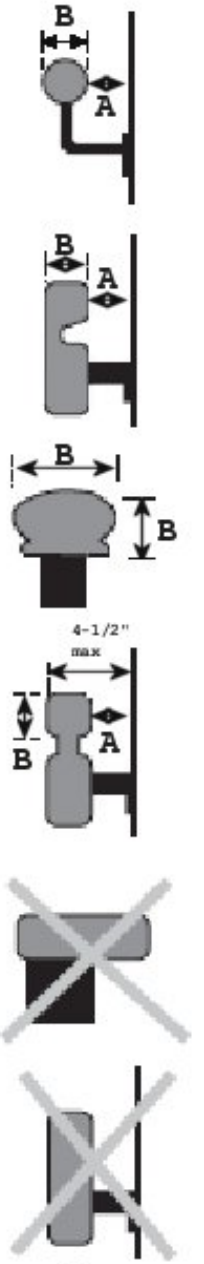

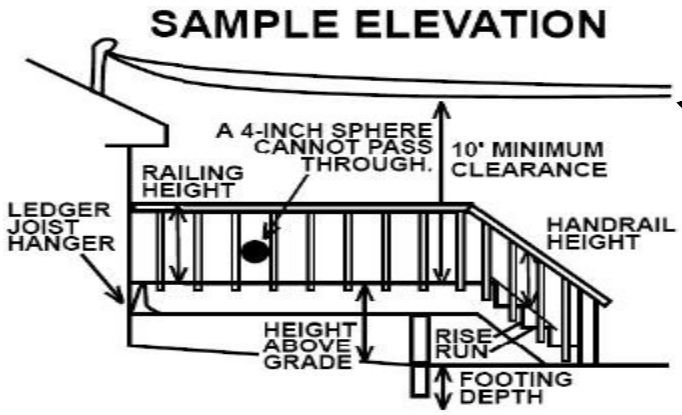

Electrical service lines over or within 3' horizontally of the deck or stairs *must* have a minimum 10' vertical clearance.

RAILINGS

Guardrails are required for portions of decks 30” or more above grade. The height of the rail must be a minimum of 36”. Open guardrails must have intermediate rails or an ornamental pattern that a 4” sphere cannot pass through. Guardrails must continue down stairs where the stair is more than 30 inches above grade.

STAIRS

Stairs must have a maximum rise of 8 1/4 inches and a minimum run of 9 inches. *The run is measured from the nosing of one tread to the nosing of the next. The greatest riser height within any flight of stairs shall not exceed the smallest by more than ⅜ inch. The greatest tread depth within any flight of stairs shall not exceed the smallest by more than ⅜ inch.*

Maximum step down is 8 ¼” from interior finished floor to top of the deck platform at the patio door.

Open risers are permitted provided that a 4” diameter sphere will not pass thru the opening between the treads.

SAFTEY GLAZING

All glass (windows) shall be reviewed for tempered glazing requirements. Be sure to show location of all windows in relation to deck stairs, landings, top and bottom treads, and walking surfaces.

Wood Treatment

Wood used above ground, in contact with the ground, or below ground requires different degrees of treatment. Check the labels of the material you are buying to determine where it can be used. ***Because the new preservative treatments are very corrosive, make sure that any metal connectors used in the construction of your deck are approved by the manufacturer for use with treated wood.***

Decking

Materials commonly used for decking include standard dimension lumber (either 2X4 or 2X6), radius-edged decking, or a manufactured decking product. ***2X6 dimension lumber is the only lumber product that can be used on joist spacing of 24 inches.***
Radius-edged Patio Decking has been specifically developed for outdoor decks. ***Patio decking is intended to be used flat-wise in load-bearing applications where joist spacing does not exceed 16" o.c. (12” o.c. when installed diagonally to joists).***

Manufactured decking products may be used only when approved by the Building Department. This approval is based on the material carrying an NER research report. Decking without a research report will not be approved. Ask the decking supplier to provide you with a copy of the research report. The Building Department maintains a list of decking materials that have been approved for use in Kentucky that is available upon request. ***Caution – some manufactured deck products are approved for decking but not for stair treads. In some cases where manufactured decking is approved for stairs, the spacing of supports***

may be significantly reduced compared to use on the deck itself. Read the research report for further information.

MAXIMUM DECK BOARD SPANS	
5/4 AND 2X4 PERPENDICULAR TO JOIST	16” O.C.
5/4 AND 2X4 AT 45 DEGRESS TO JOIST	12” O.C.
2X6	24” O.C.

INSPECTIONS

The Building Department will typically make at least two inspections of your deck. It is your responsibility to call for an inspection 1-2 days in advance of the time you need an inspection. When you call for an inspection, you will be asked for your address, the type of inspection you desire (footing, framing, final), the permit number (which is found on your building permit), and the time you want the inspection. We will make every effort to accommodate requests for inspections at specific times.

Permit holder is responsible for scheduling all inspections.

The first inspection will be of the post footings. At the time of the inspection, property pins shall be exposed, the holes should be dug and all loose material should be removed but no concrete should be poured. The inspector will check the depth of the footing and it’s width at the base. They shall also check the location of the footings for compliance with the zoning ordinance. If you are having problems with water seeping into the hole, you may wish to insert a large plastic garbage bag into the hole and pour the concrete into the bag to displace water without compromising the concrete.

The next inspection is the framing and final inspection. The inspector will check the size and spacing of joists, beams and columns, the attachment to the dwelling including flashing, the type of fasteners and lumber being used, type of decking used, railings, stairs, and landings. If your deck will be built such that the underside of the deck will not be visible or accessible at the final inspection, or you wish to have a framing inspection done prior to installation of decking and rails, please call for that inspection.

If a violation is detected a notice will be prominently placed on the digital record with the correction that must be made and time limit allowed for corrections. The notice will also indicate if a re-inspection will be necessary. If a re-inspection is necessary you must call for the inspection and have the correction approved before proceeding unless directed otherwise by the inspector.

If at any time during the construction of your deck you have a question, please do not hesitate to call the Building Department at (859) 258-3770.

.

CHECKLIST FOR DECK PLANS

(This information is to be provided on your plan.) Please Verify!

Site Plan

- ☐ Street address and/or legal description shown
- ☐
- ☐ Size/location of existing buildings, easements and buffers
- ☐ All lot dimensions and pin locations shown
- ☐ Location and size of proposed deck shown
- ☐ Distance from all lot lines to proposed deck
- ☐ Locations of existing windows/doors (glass) and window wells if applicable [Tempered glass may be required at landings, walking surfaces, top or bottom tread and next to stairs.]

Construction Plans

- ☐ A complete set of plans submitted
- ☐ All measurements, distances, sizes and lumber dimensions have been noted on plan
- ☐ Plan neat and legible
- ☐ Is deck connected to a cantilever? If so indicate what type of floor system the cantilever is framed with.

Elevation (This could be illustrated on section drawings see page 16)

- ☐ Show side and/or front view of deck in relation to grade and dwelling
- ☐ Include railing height and design

Framing Plan {fill in blanks on page 16}

- ☐ Floor joist size and spacing including species and grade
- ☐ Orientation of floor joists
- ☐ Cantilever of joists beyond beam (max. 2 feet)
- ☐ Bearing points for all joists
- ☐ Size and location of all beams including species and grade
- ☐ Cantilever of beams beyond post (max. 1 ft)
- ☐ Size and location of ledger board including species and grade
- ☐ Size and location of all columns/post
- ☐ Location of stairs
- ☐ Changes in elevation of deck floors or landings
- ☐ Unusual framing issues such as cantilevers of the dwelling floor

Footings (This information may be included on section or framing plans see page 16)

- ☐ Footing depth and design
- ☐ Footing width at base consistent with load for each footing location.

Section(s)

- ☐ Cross section or top view(s) from bottom of footing to top of guard to show railing details; floor framing orientation; joist/beam orientation and bearing; column locations; connections; footing design, size, and depth; and height of deck floor above grade.

Details

- ☐ Flashing at the ledger
- ☐ Joist bearing/hangers
- ☐ Ledger connection (Caution for dwelling floor cantilevers)
- ☐
- ☐ Column/beam connection
- ☐ Column/footing connection
- ☐ Type of decking and orientation (Caution for 5/4 or composite decking for spans more than 16" o.c. or installed diagonally
- ☐ Provide stair stringer connection detail **See examples**
- ☐ Lateral bracing is required when the deck platform is 2 feet and greater measured from finished grade (see page 9
- ☐ Width of stairs (36" minimum width)
- ☐ Rise/run w/tolerance shown
- ☐ Number and size of stringers (see page 8)
- ☐ Open riser design (less than 30" above grade)
- ☐ Type and size of tread consistent with stringer spacing (Caution for decking use)
- ☐ Circle handrail detail that will be used
- ☐ Handrail height shown on plan (see page 8)
- ☐ Landing at bottom of stair (grade is acceptable when within rise tolerance)

Guards {Fill in blanks page 16}

- ☐ Guard height and opening dimensions
- ☐ Guard design/materials
- ☐ Guard attachment

Date: _____

Job Address: _____

TABLE R507.4
MAXIMUM JOIST SPACING

MATERIAL TYPE AND NOMINAL SIZE	MAXIMUM ON-CENTER JOIST SPACING	
	Perpendicular to Joist	Diagonal to joist"
$1^{1}/_{4}$-inch-thick wood	16 inches	12 inches
2-inch-thick wood	24 inches	16 inches
Plastic composite	In accordance with Section R507.3	In accordance with Section R507.3

For SI: 1 inch.= 25.4 mm, 1 foot= 304.8 mm, 1 degree= 0.01745 rad.
a. Maximum angle of 45 degrees from perpendicular for wood deck boards

TABLE R507.5
DECK JOIST SPANS FOR COMMON LUMBER SPECIES' (ft. - in.)

SPECIES'	SIZE	SPACING OF DECK JOISTS WITH NO CANTILEVER [b] (inches)			SPACING OF DECK JOISTS WITH CANTILEVERS• (inches)		
		12	16	24	12	16	24
Southern pine	2 X 6	9-11	9-0	7-7	6-8	6-8	6-8
	2 x 8	13-1	11-10	9-8	10-1	10-1	9-8
	2 X 10	16-2	14-0	11-5	14-6	14-0	11-5
	2 X 12	18-0	16-6	13-6	18-0	16-6	13-6
Douglas fir-larch[d], hem-fl spruce-pine-fl	2 X 6	9-6	8-8	7-2	6-3	6-3	6-3
	2 X 8	12-6	11-1	9-1	9-5	9-5	9-1
	2 x 10	15-8	13-7	11-1	13-7	13-7	11-1
	2 X 12	18-0	15-9	12-10	18-0	15-9	12-10
Redwood, western cedars, ponderosa pine", red pine[c]	2 X 6	8-10	8-0	7-0	5-7	5-7	5-7
	2 x 8	11-8	10-7	8-8	8-6	8-6	8-6
	2 x 10	14-11	13-0	10-7	12-3	12-3	10-7
	2 x 12	17-5	15-1	12-4	16-5	15-1	12-4

For SI: I inch= 25.4 mm, I foot= 304.8 mm, 1 pound per square foot= 0.0479 kPa, 1 pound= 0.454 kg.
a. No. 2 grade with wet service factor.
b. Ground snow load, live load= 40 psf, dead load= IO psf, Lid= 360.
c. Ground snow load, live load= 40 psf, dead load= IO psf, Lid= 360 at main span, L/,1 = 180 at cantilever with a 220-pound point load applied to end.
d. Includes incising factor.
e. Northern species with no incising factor
f. Cantilevered spans not exceeding the nominal depth of the joist are permitted.

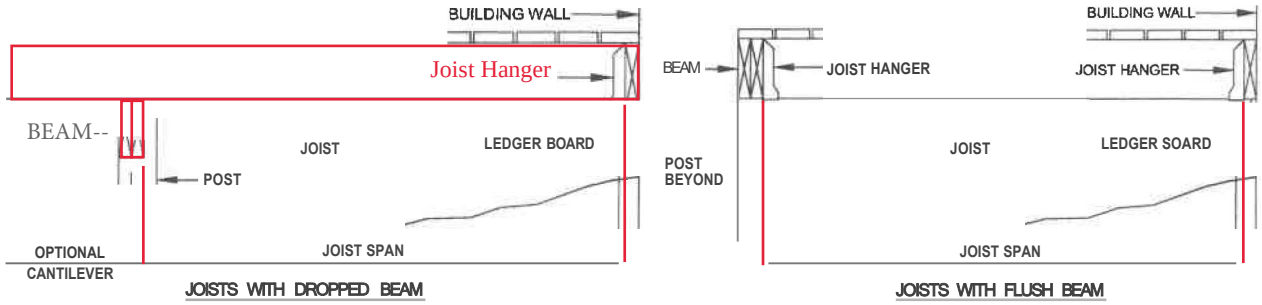

FIGURE R507.5
TYPICAL DECK JOIST SPANS

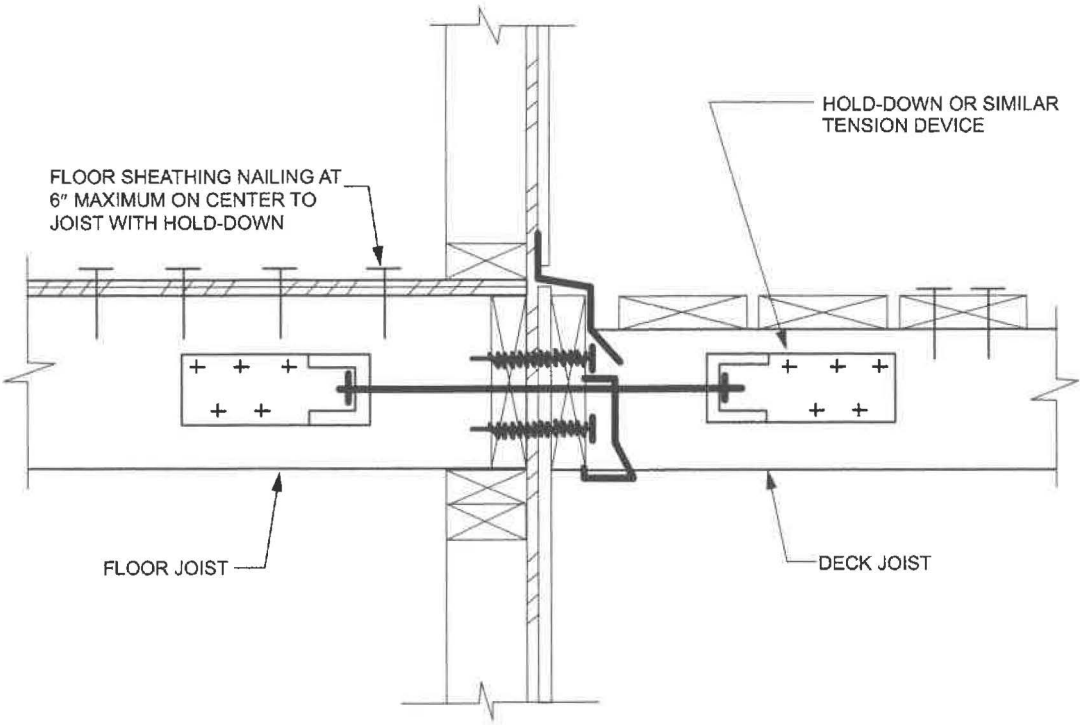

For SI: 1 inch = 25.4 mm.

FIGURE 507.2.3(1)
DECK ATTACHMENT FOR LATERAL LOADS

Be advised, decks may not be structurally supported by or through brick veneer unless a structural engineer stamps and signs a plan which depicts how this connection will be accomplished.

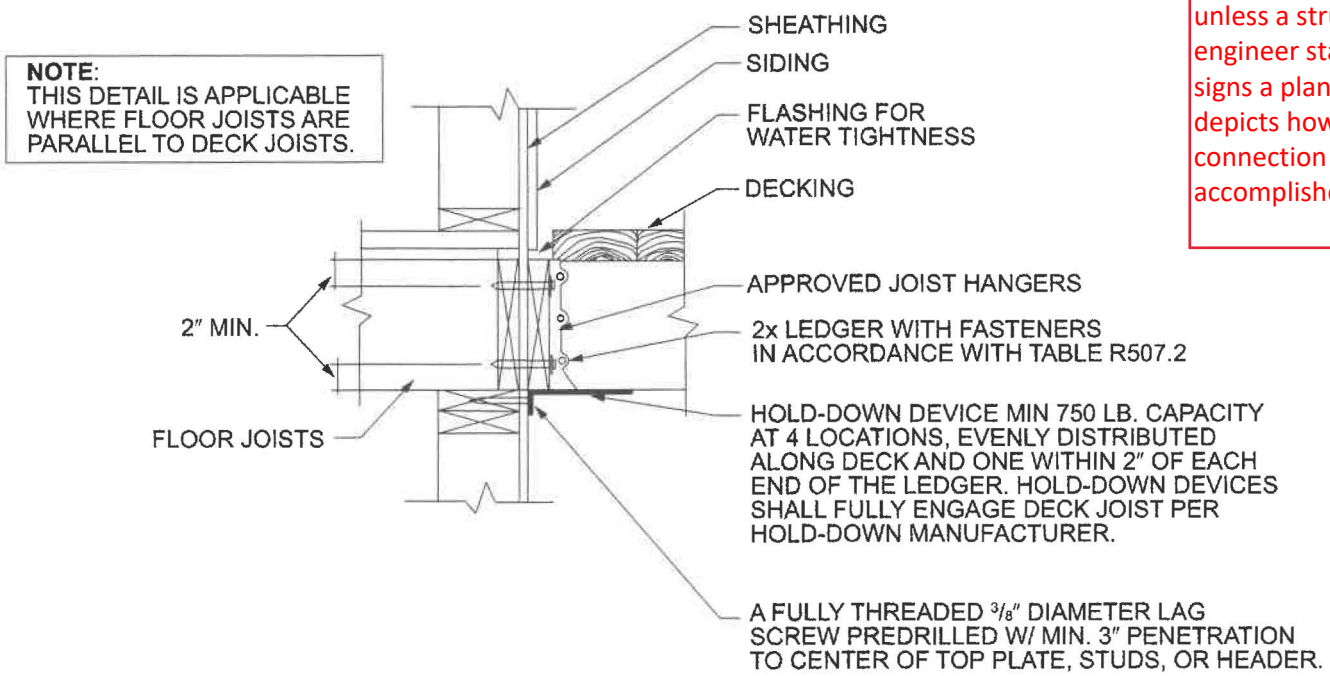

For SI: 1 inch = 25.4 mm, 1 foot = 304.8 mm.

FIGURE R507.2.3(2)
DECK ATTACHMENT FOR LATERAL LOADS

TABLE R507.6
DECK BEAM SPAN LENGTHs•, ᵇ (ft.· in.)

SPECIES•	SIZE⁰	DECK JOIST SPAN LESS THAN OR EQUAL TO: (feet)						
		6	8	10	12	14	16	18
Southern pine	2 - 2 X 6	6-11	5-11	5-4	4-10	4-6	4-3	4-0
	2 - 2 X 8	8-9	7-7	6-9	6-2	5-9	5-4	5-0
	2 - 2 X 1 0	10-4	9-0	8-0	7-4	6-9	6-4	6-0
	2 - 2 X 12	12-2	10-7	9-5	8-7	8-0	7-6	7-0
	3 - 2 X 6	8-2	7-5	6-8	6-1	5-8	5-3	5-0
	3 - 2 X 8	10-10	9-6	8-6	7-9	7-2	6-8	6-4
	3 - 2 X 1 0	13-0	11-3	10-0	9-2	8-6	7-11	7-6
	3 - 2 X 12	15-3	13-3	11-10	10-9	10-0	9-4	8-10
Douglas fir-larch", hem-fir, spruce-pine-fir, redwood, western cedars, ponderosa pineʳ, red pineʳ	3 x 6 or 2 - 2 x 6	5-5	4-8	4-2	3-10	3-6	3-1	2-9
	3 x 8 or 2 - 2 X 8	6-10	5-11	5-4	4-10	4-6	4-1	3-8
	3 x 10 or 2 - 2 x 10	8-4	7-3	6-6	5-11	5-6	5-1	4-8
	3 x 12 or 2 - 2 x 12	9-8	8-5	7-6	6-10	6-4	5-11	5-7
	4 X 6	6-5	5-6	4-11	4-6	4-2	3-11	3-8
	4 X 8	8-5	7-3	6-6	5-11	5-6	5-2	4-10
	4 X 10	9-11	8-7	7-8	7-0	6-6	6-1	5-8
	4 X 12	11-5	9-11	8-10	8-1	7-6	7-0	6-7
	3 - 2 X 6	7-4	6-8	6-0	5-6	5-1	4-9	4-6
	3 - 2 X 8	9-8	8-6	7-7	6-11	6-5	6-0	5-8
	3 - 2 X 1 0	12-0	10-5	9-4	8-6	7-10	7-4	6-11
	3 - 2 X 1 2	13-11	12-1	10-9	9-10	9-1	8-6	8-1

For SI: I inch= 25.4 mm, l foot= 304.8 mm, I pound per square foot= 0.0479 kPa, 1 pound= 0.454 kg.

a. Ground snow load, live load = 40 psf, dead load= IO psf, L/fl = 360 at main span, L/fl = 180 at cantilever with a 220-pound point load applied at the end.

b. Beams supporting deck joists from one side only.

c. No. 2 grade, wet service factor.

d. Beam depth shall be greater than or equal to depth ofjoists with a flush beam condition.

e. Includes incising factor.

f. Northern species. Incising factor not included.

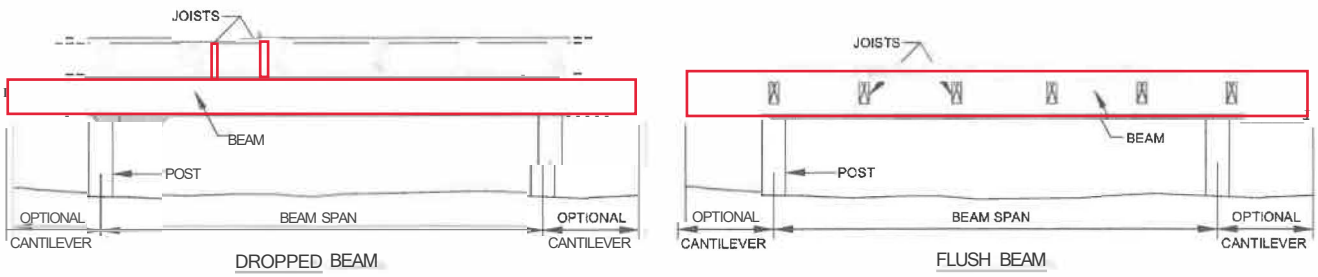

FIGURE R507.6
TYPICAL DECK BEAM SPANS

Sample Site Plan

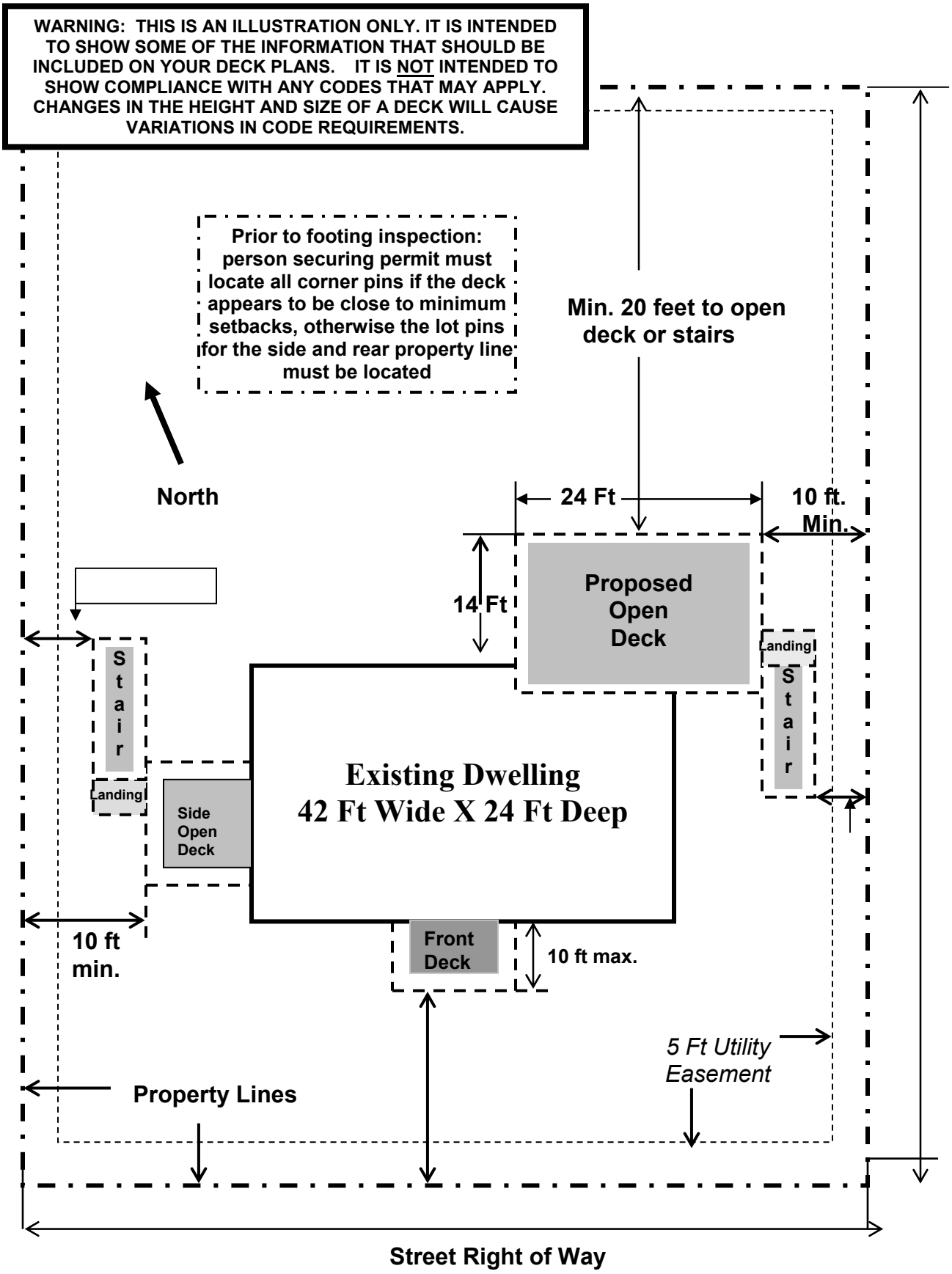

1234 Oak Street

Single Family Residential Open Deck Plan

Address:

_____

Directions

1. Fill in the blanks on page 16 with dimensions and material which will be used to build the structure. Please print legibly.
2. Indicate in the check list which items pertain to your deck design on page 14.

Type of decking _____ **x** _____ **-** _____
(example: 1 x 4 - decking board or 2 x 6 - Trex

Size of ledger & size and amount of lags
_____
(example: 2x10 ledger with two 1/2 x 51/2" lags @ 12")

2 x _____ **joist, lumber species, Spaced** _____" **apart**
(example: 2 x 10; syp #2, spaced 16" apart) see page 12

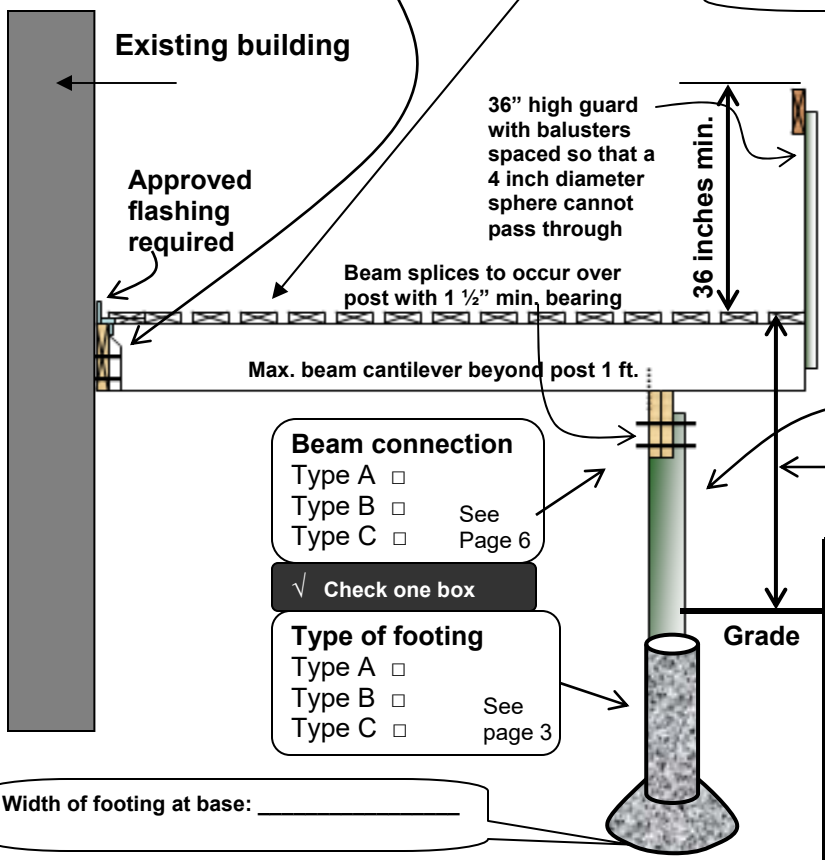

(__) **2 x** _____ **beam** ____ **lumber species**
(example: 2- 2 x 10; syp #2, beam see page 13)

Post span _____
(example: 13' – 4" apart)

Joist Cantilever _____"
(example: 24")

Size of post: _____
(example 4 x 6 or 5 x 6 or 6 x 6)

Height above grade: _____ **ft & in**
(example: 5' 6" from grade to deck)

Beam connection
Type A ☐
Type B ☐
Type C ☐
See Page 6

√ **Check one box**

Type of footing
Type A ☐
Type B ☐
Type C ☐
See page 3

Width of footing at base: _____

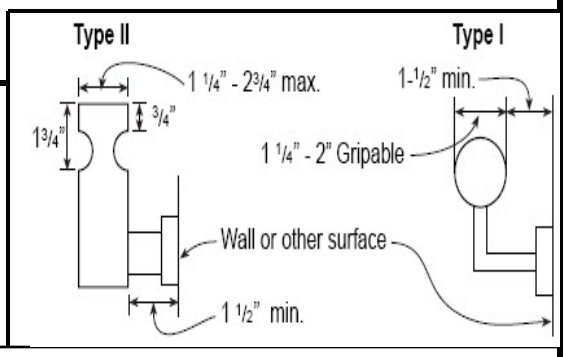

Plan View

Please provide a plan view of your deck as seen in the middle of page 5 which demonstrates the placement of beams and support posts for the beams. You do not need to include the tributary loads.

_____
_____
_____
_____
_____
_____
_____
_____
_____
_____
_____
_____

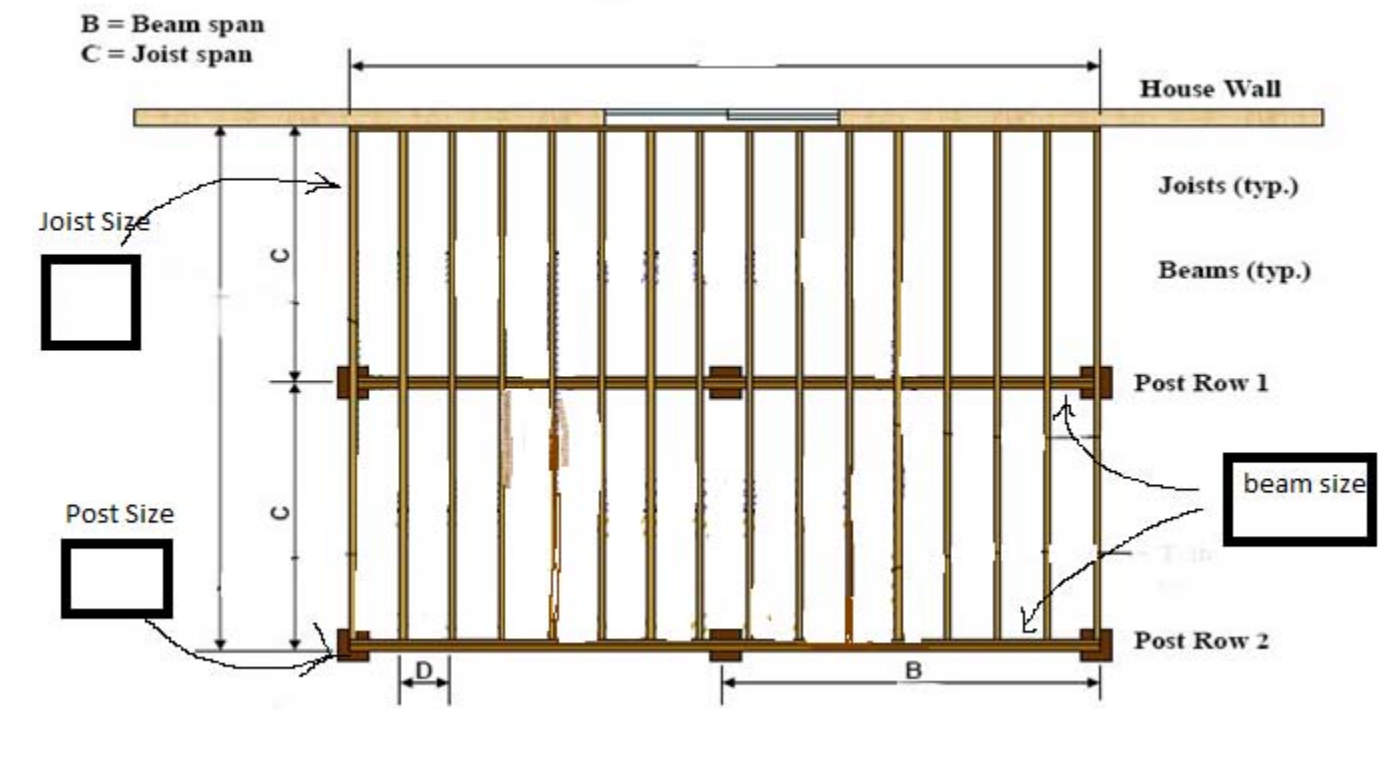

Please provide Post size, joist size, beam size, and dimensions for dimension lines.